WOODBRIDGE®

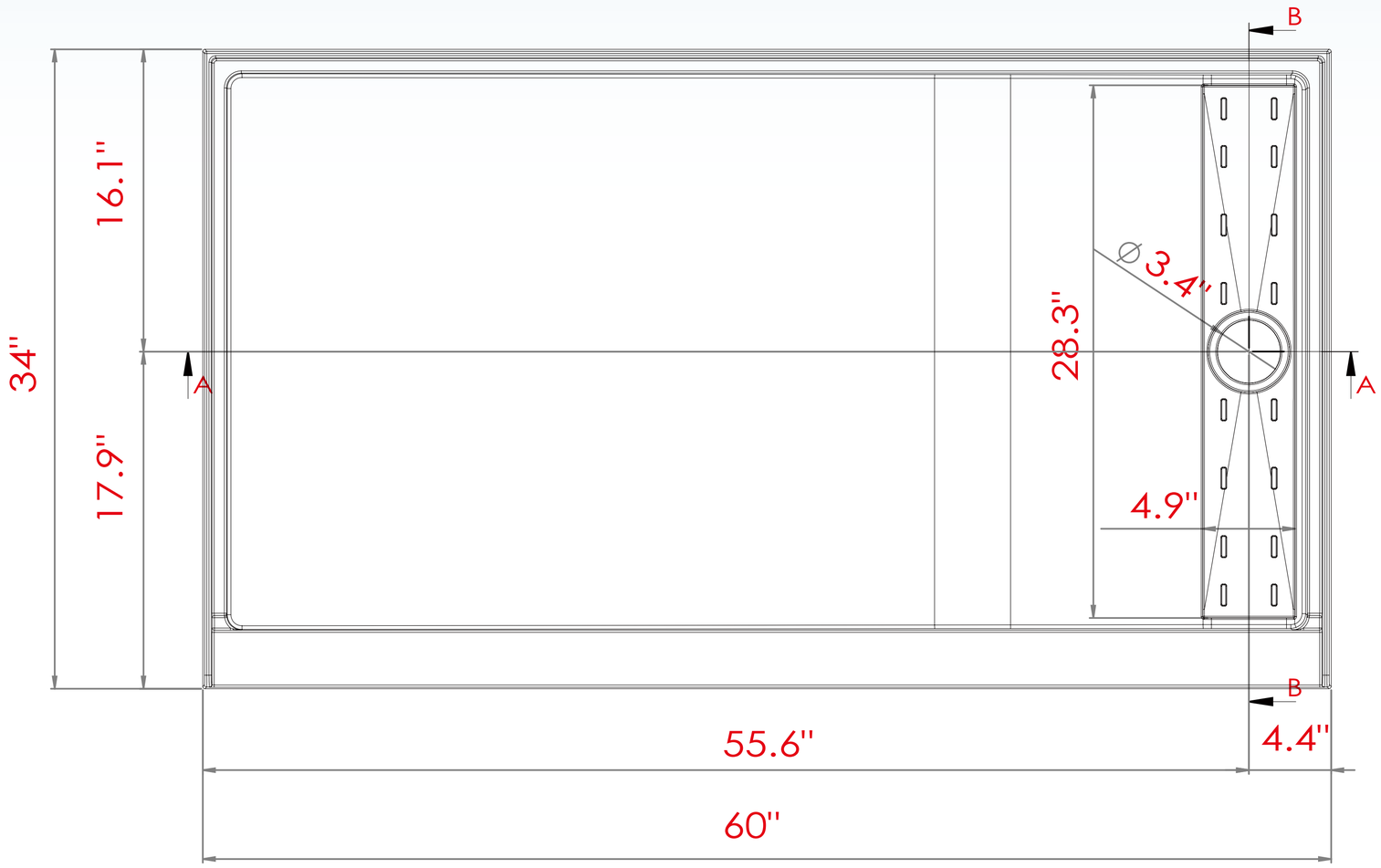
B
16.1"
34"
17.9"
A
28.3"
Ø 3.4"
A
4.9"
B
55.6"
4.4"
60"

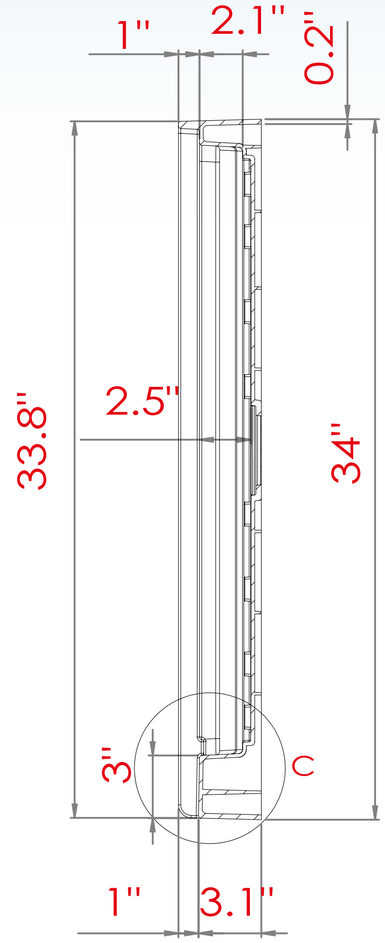
1"
2.1"
0.2"
33.8"
2.5"
34"
3"
C
1"
3.1"

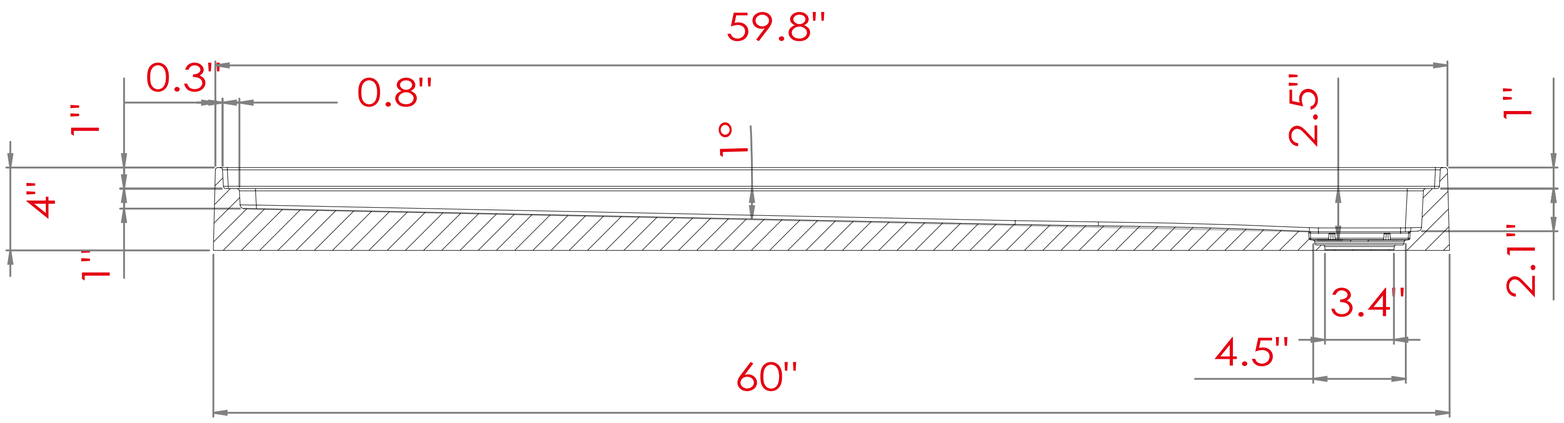
59.8"
0.3"
0.8"
1"
1°
2.5"
1"
4"
1"
2.1"
3.4"
4.5"
60"

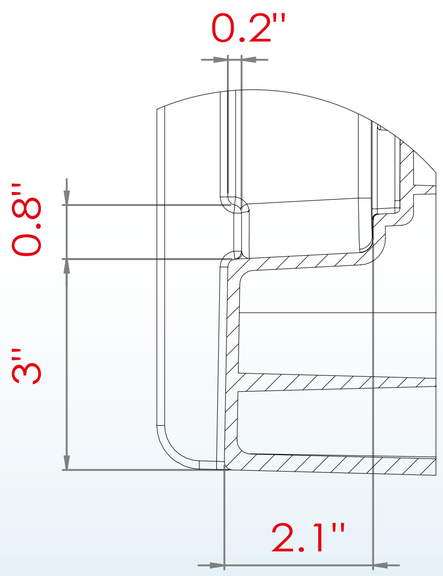
0.2"
0.8"
3"
2.1"