SERA
Bathroom Designs

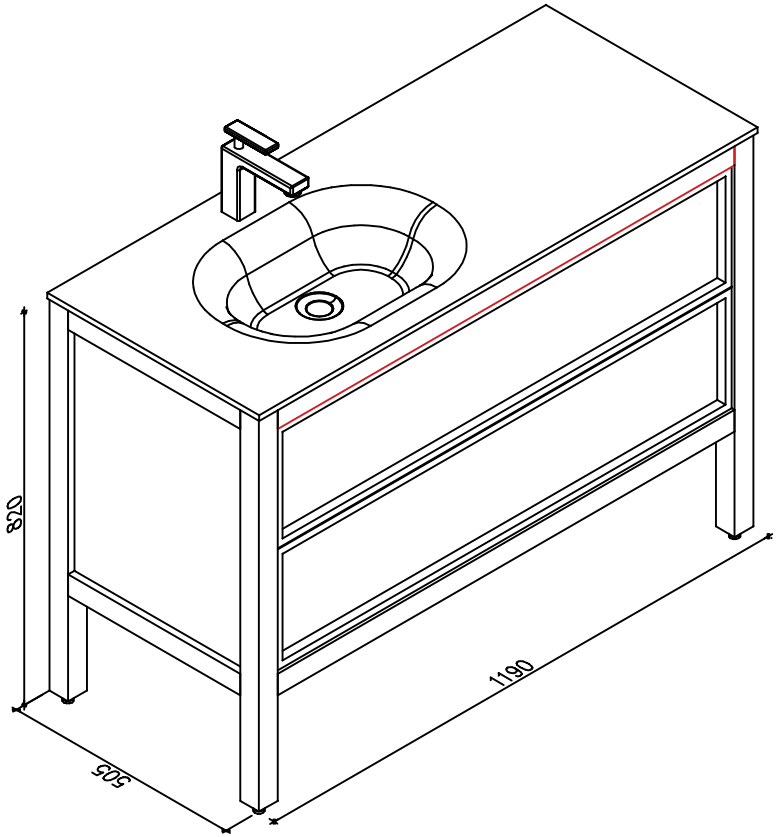

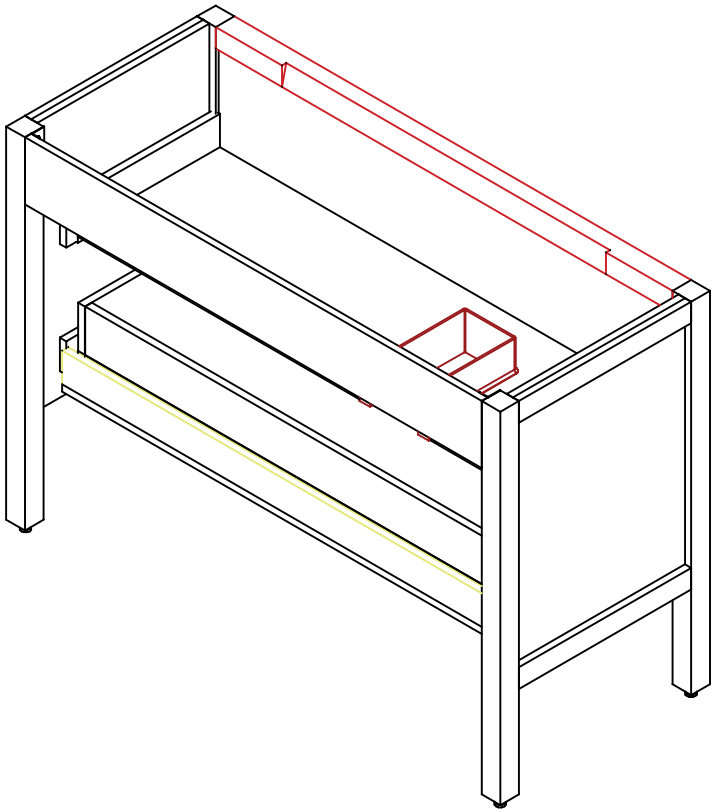

SERA
Bathroom Designs

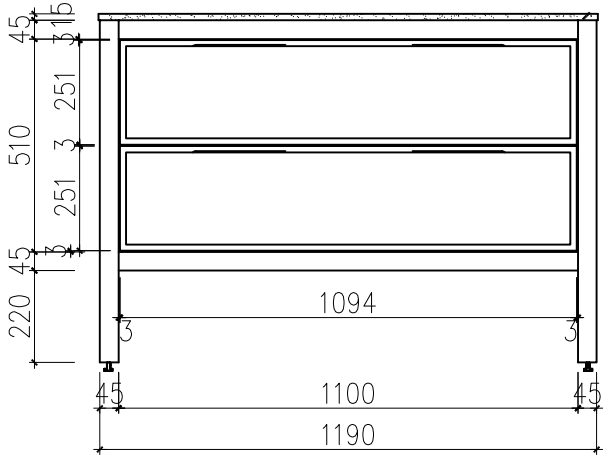

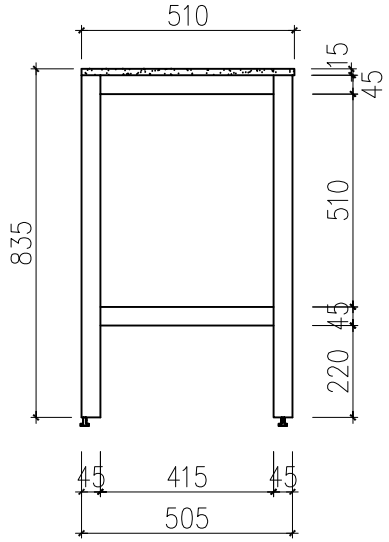

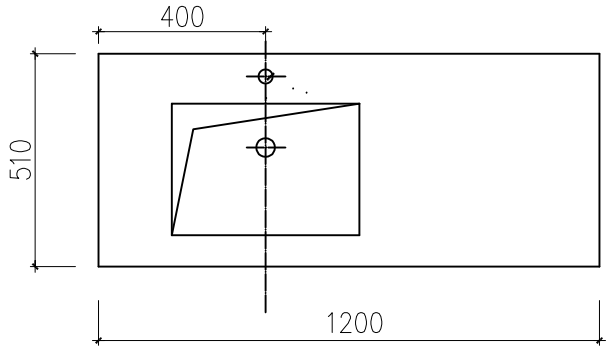

SERA
Bathroom Designs

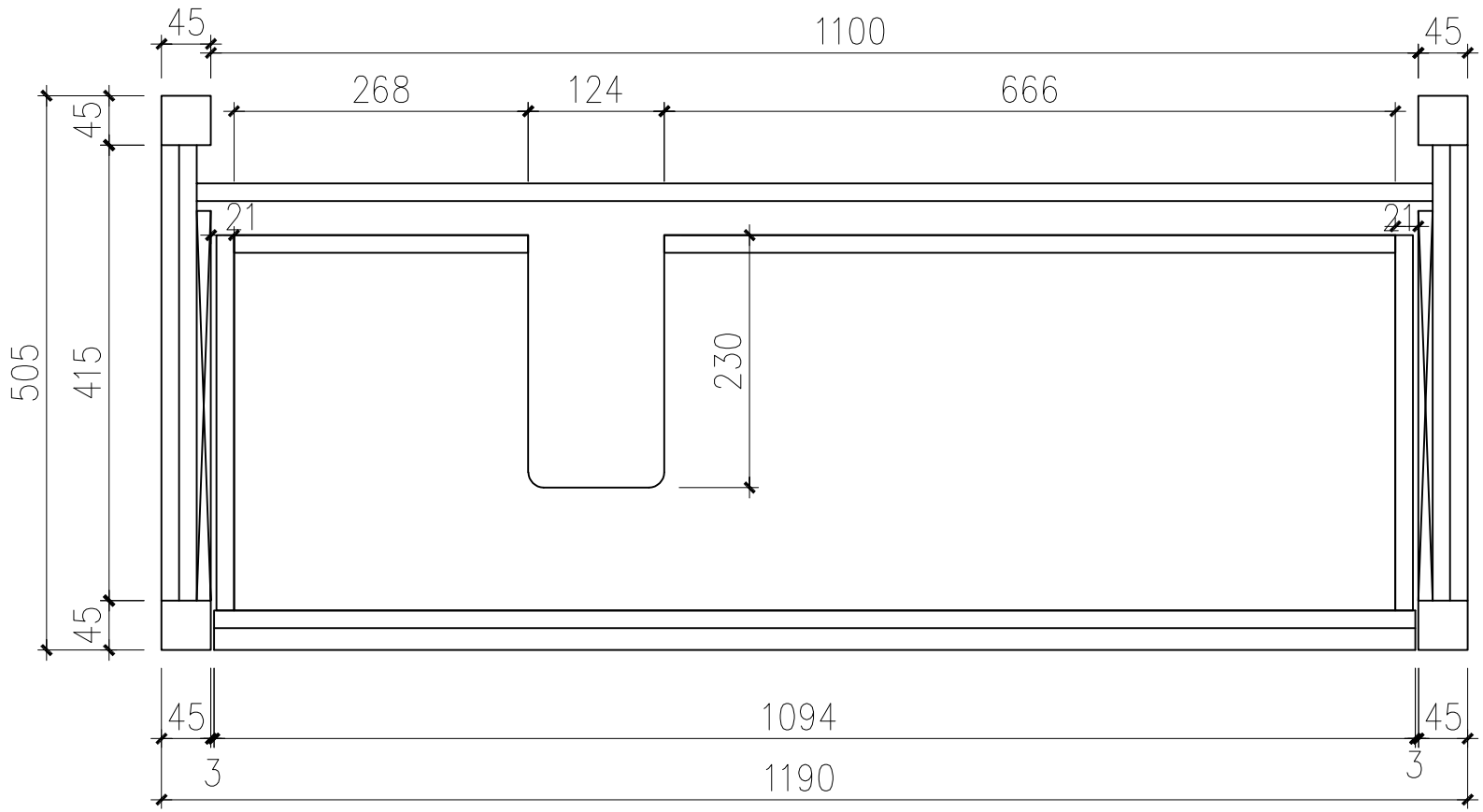

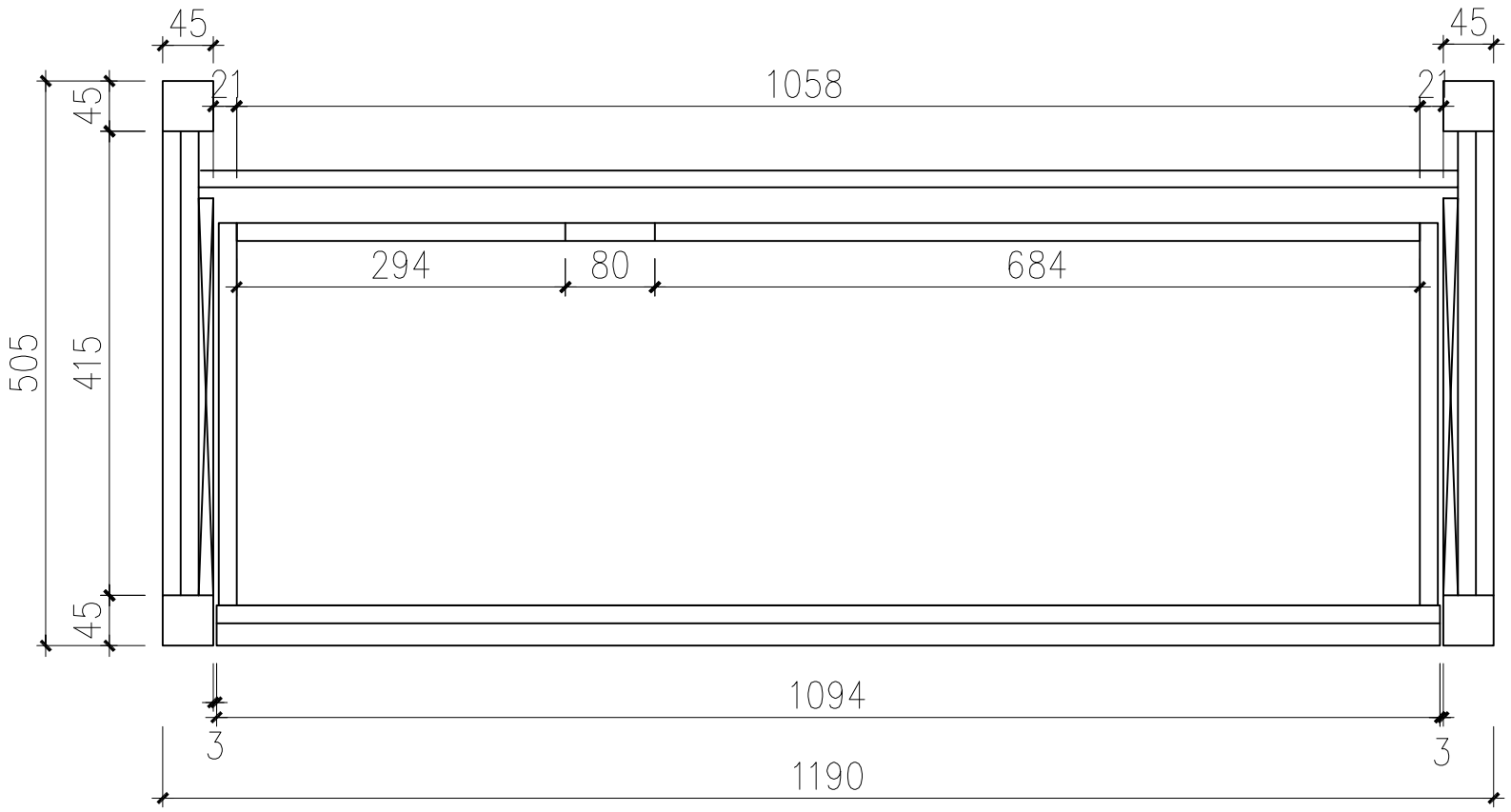

SERA
Bathroom Designs

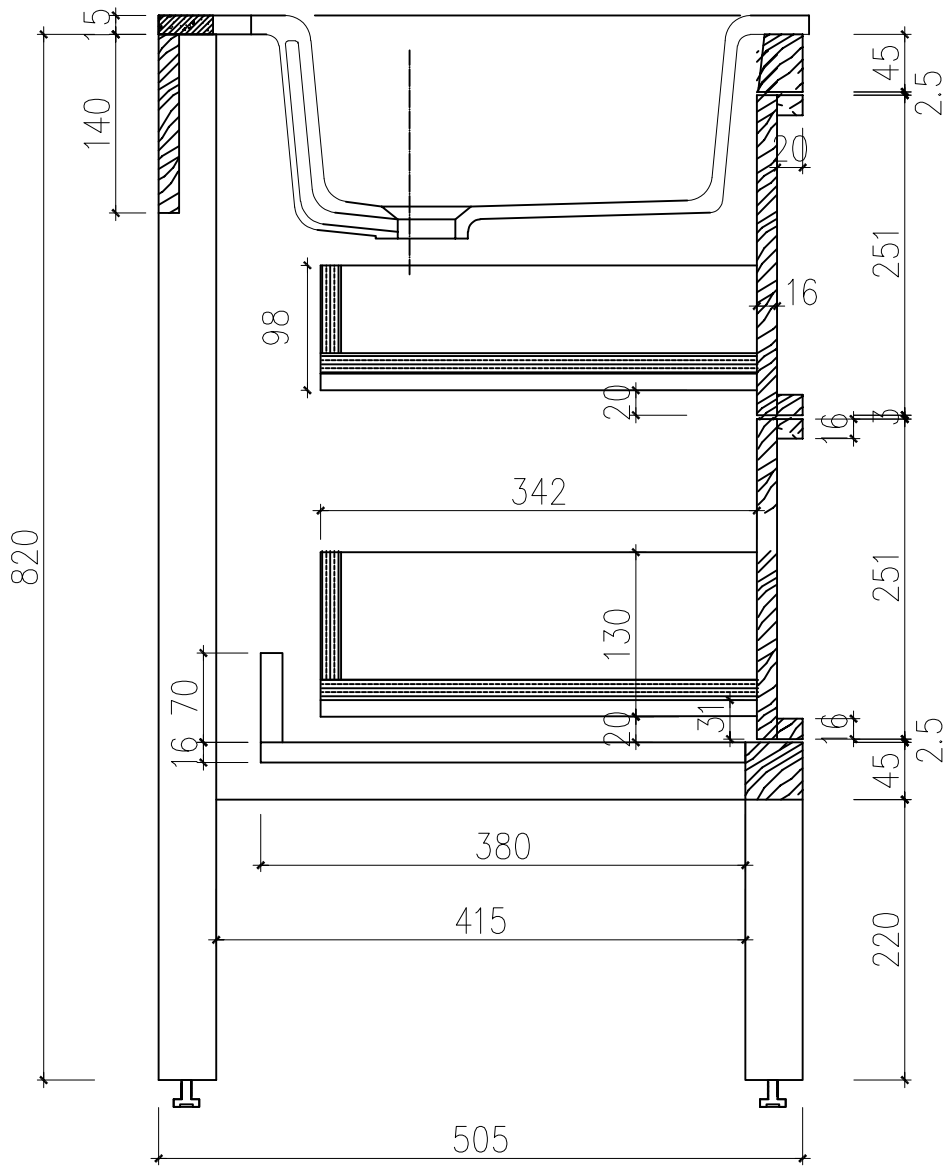

SERA
Bathroom Designs