SERA
Bathroom Designs

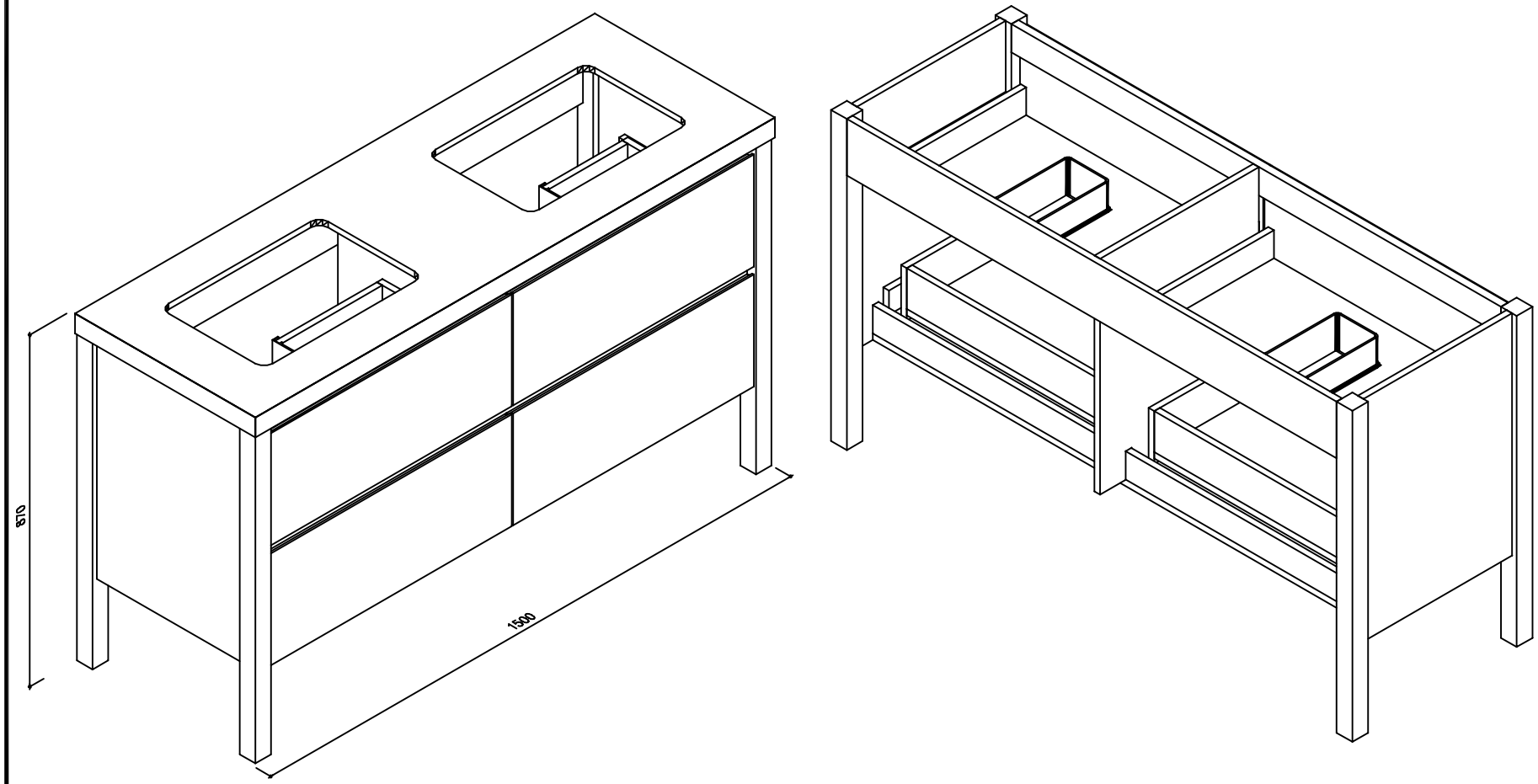

SERA
Bathroom Designs

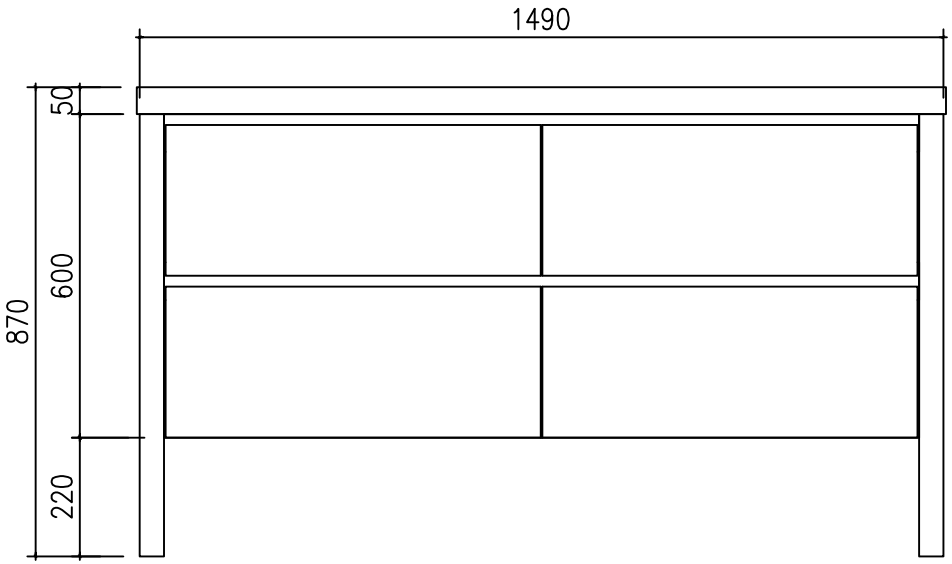

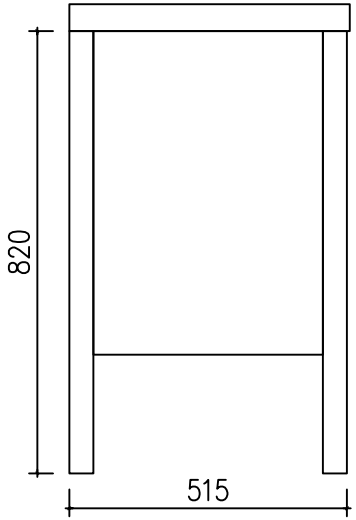

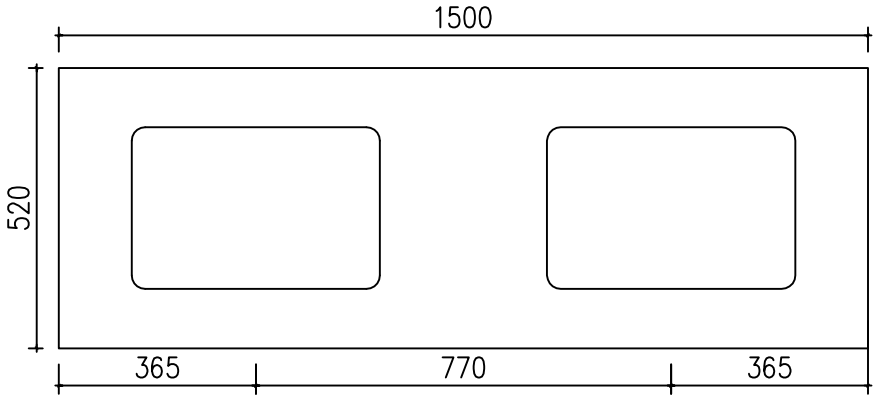

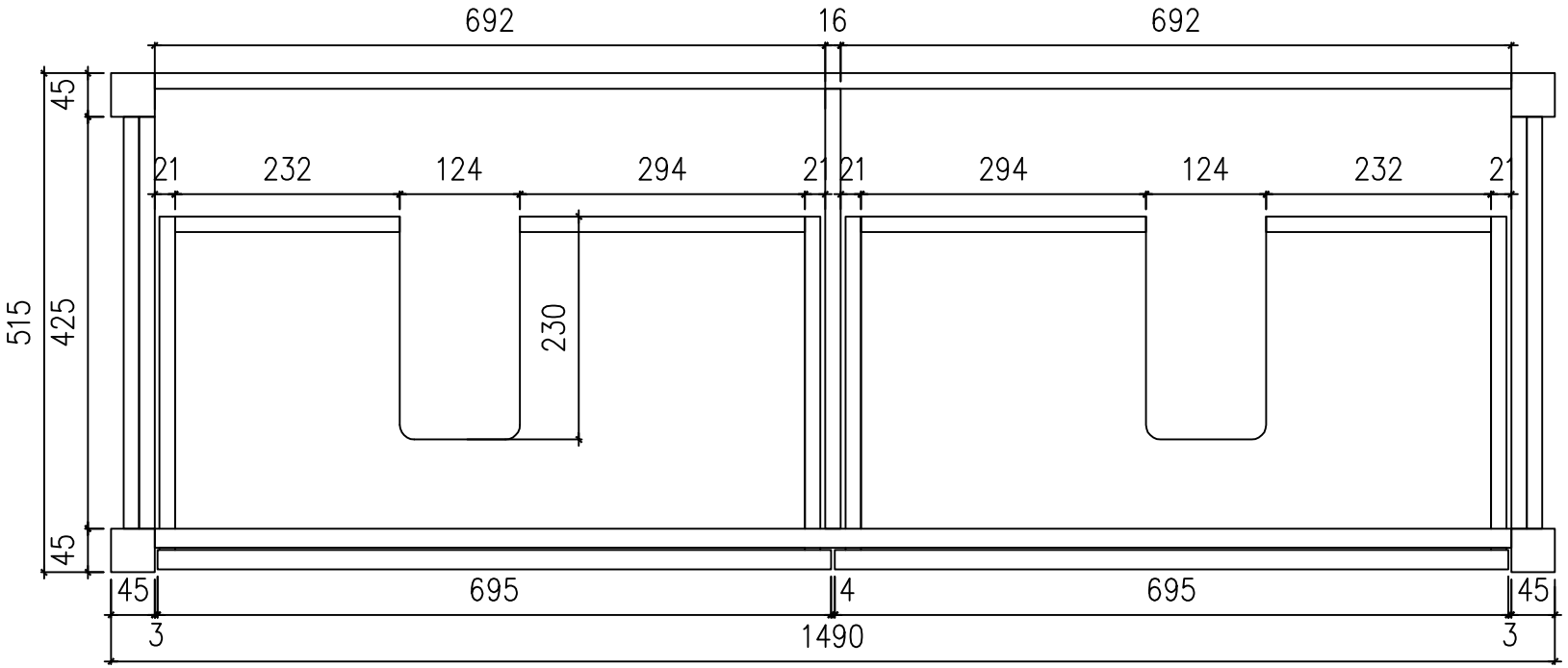

SERA
Bathroom Designs

SERA
Bathroom Designs

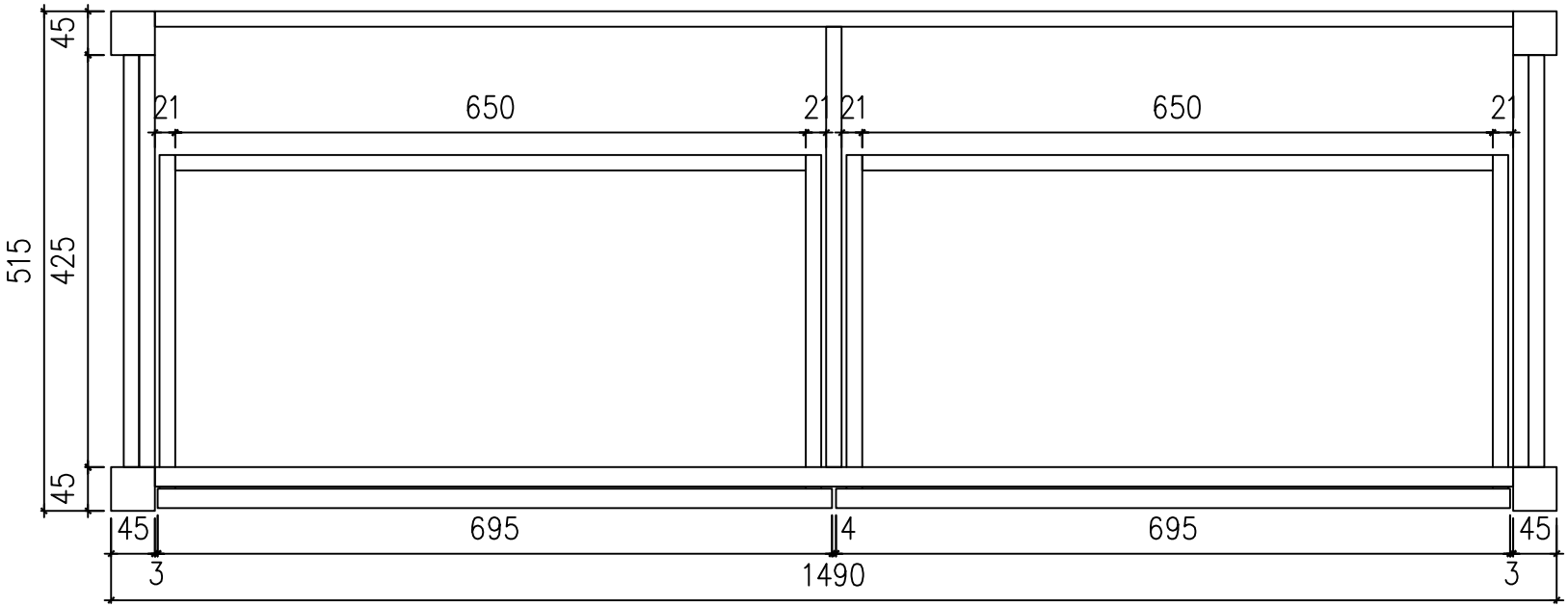

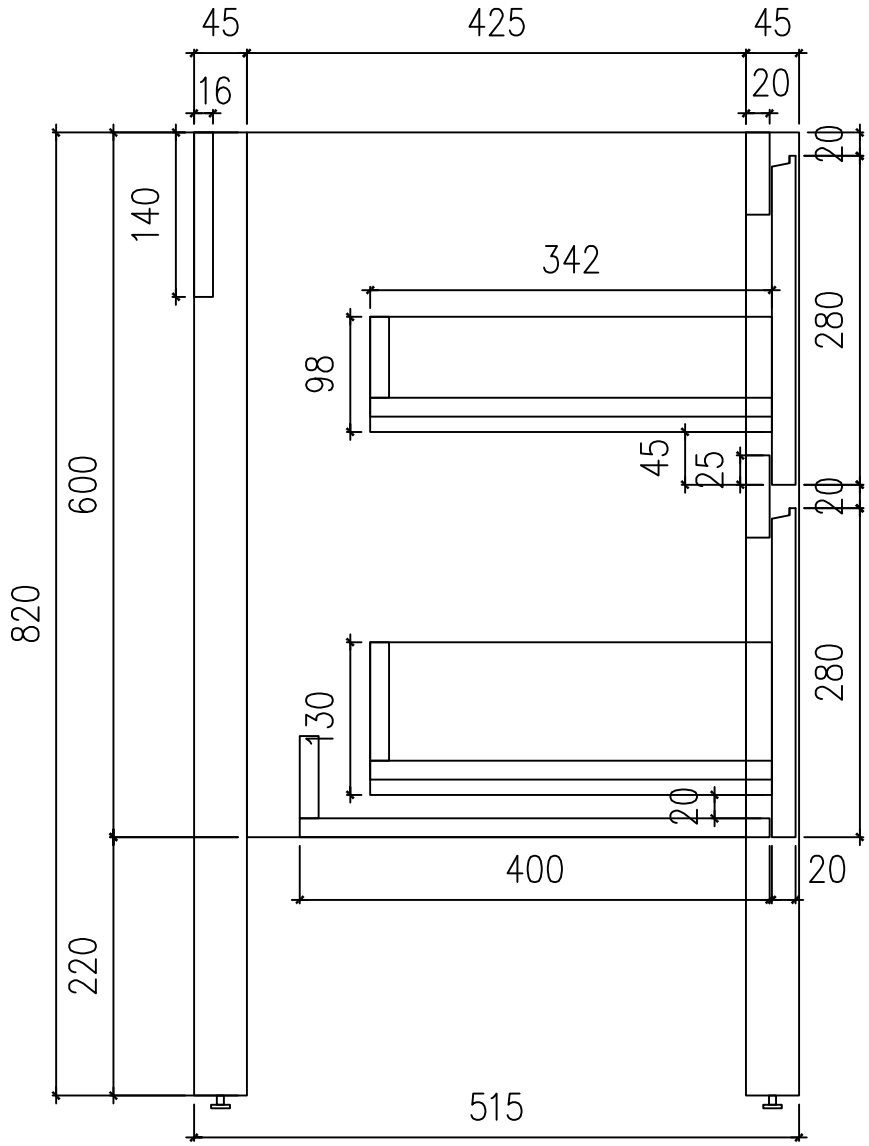

SERA
Bathroom Designs