DIMENSIONS
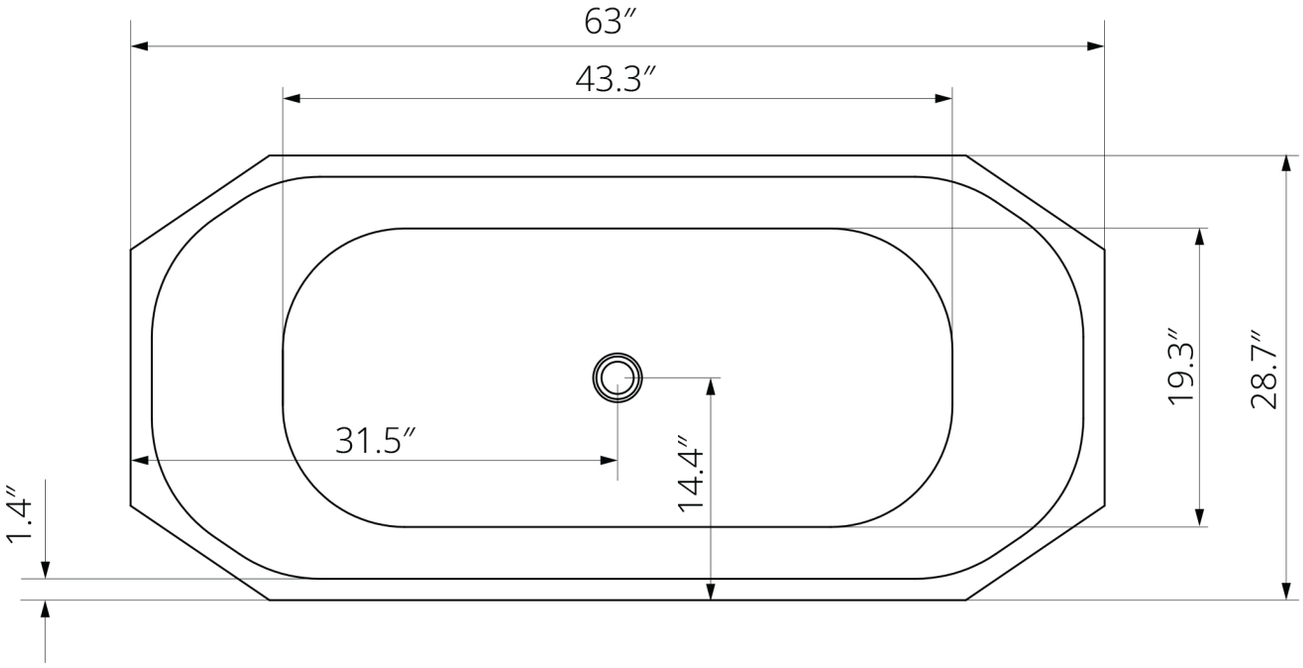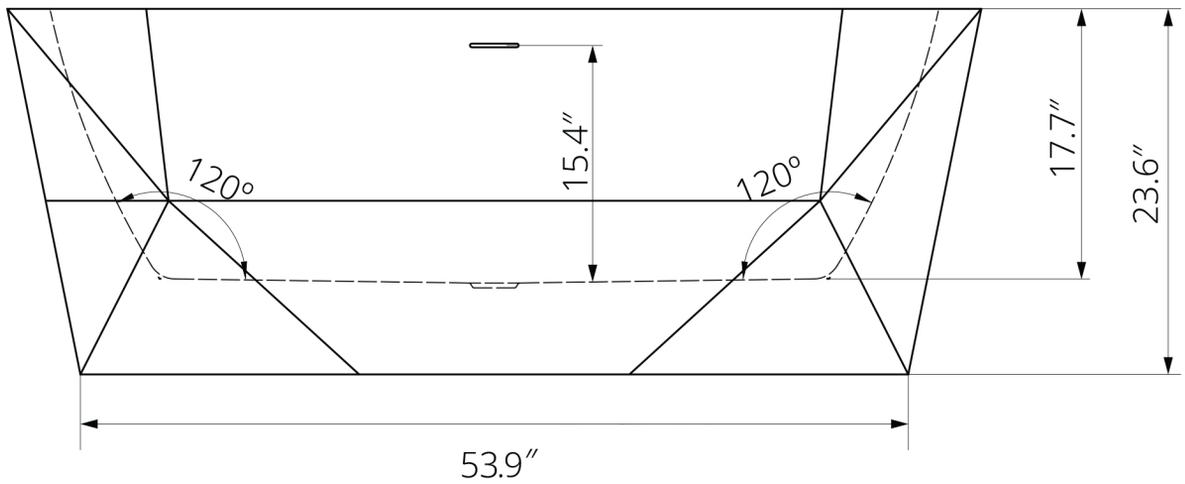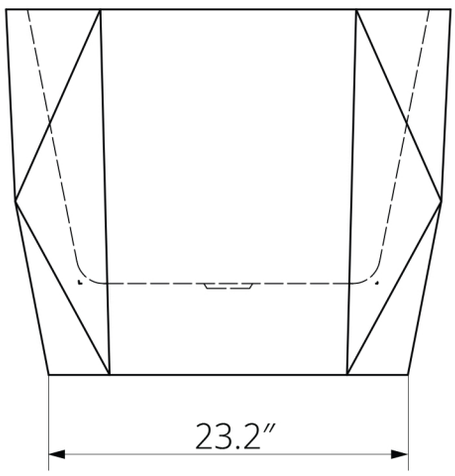
Streamline