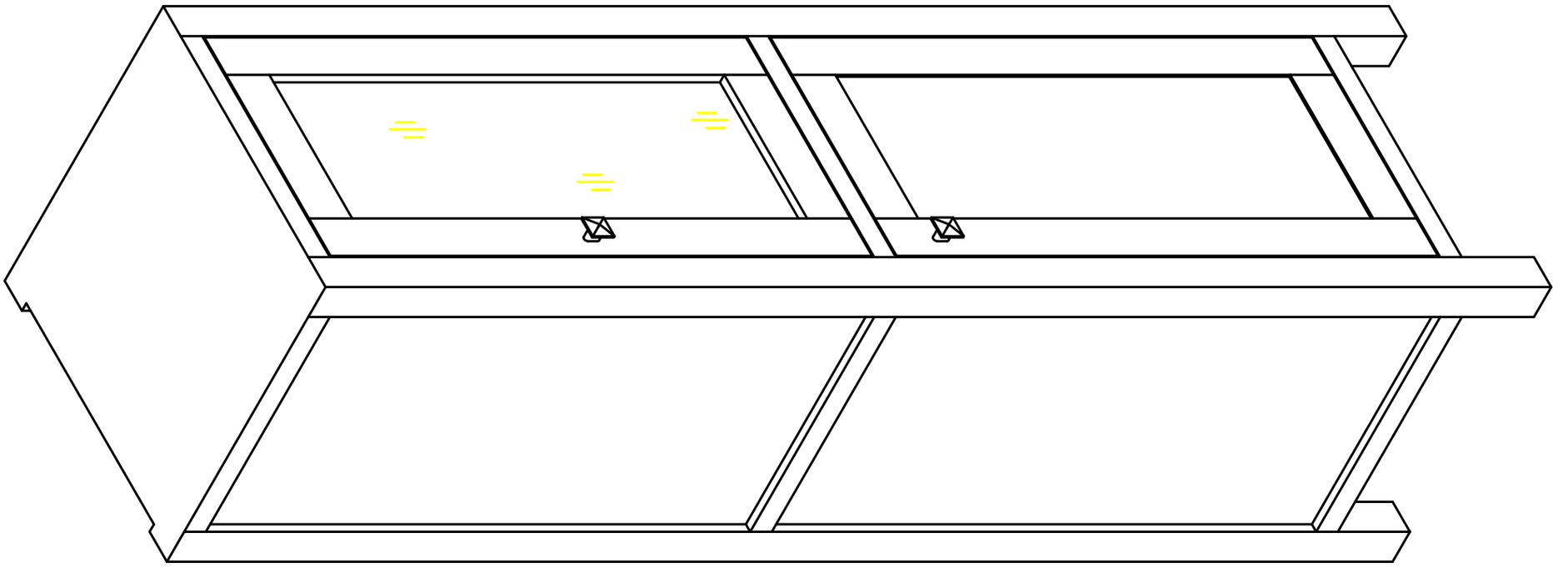

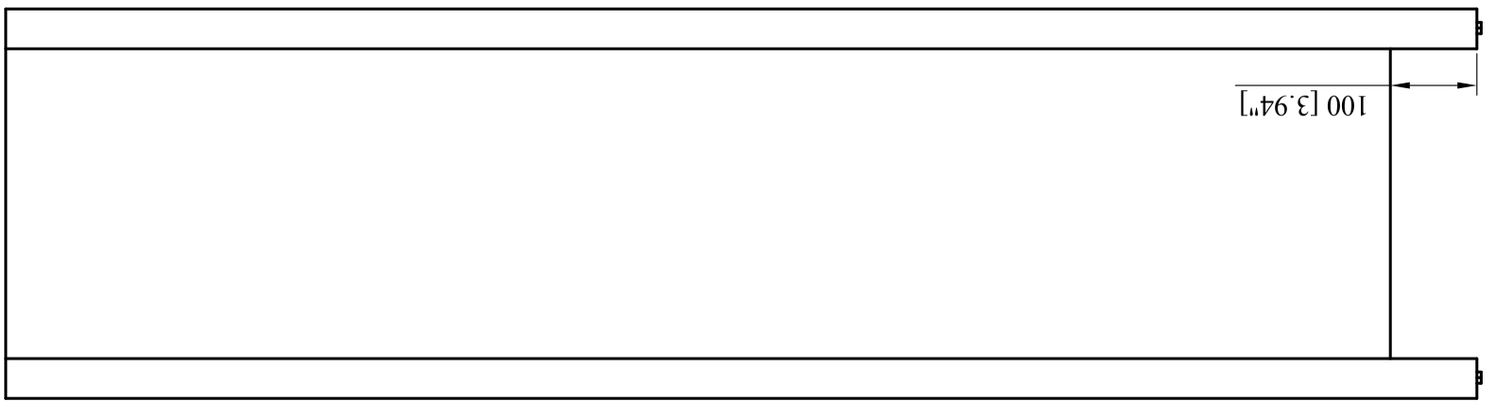
100 [3.94"]

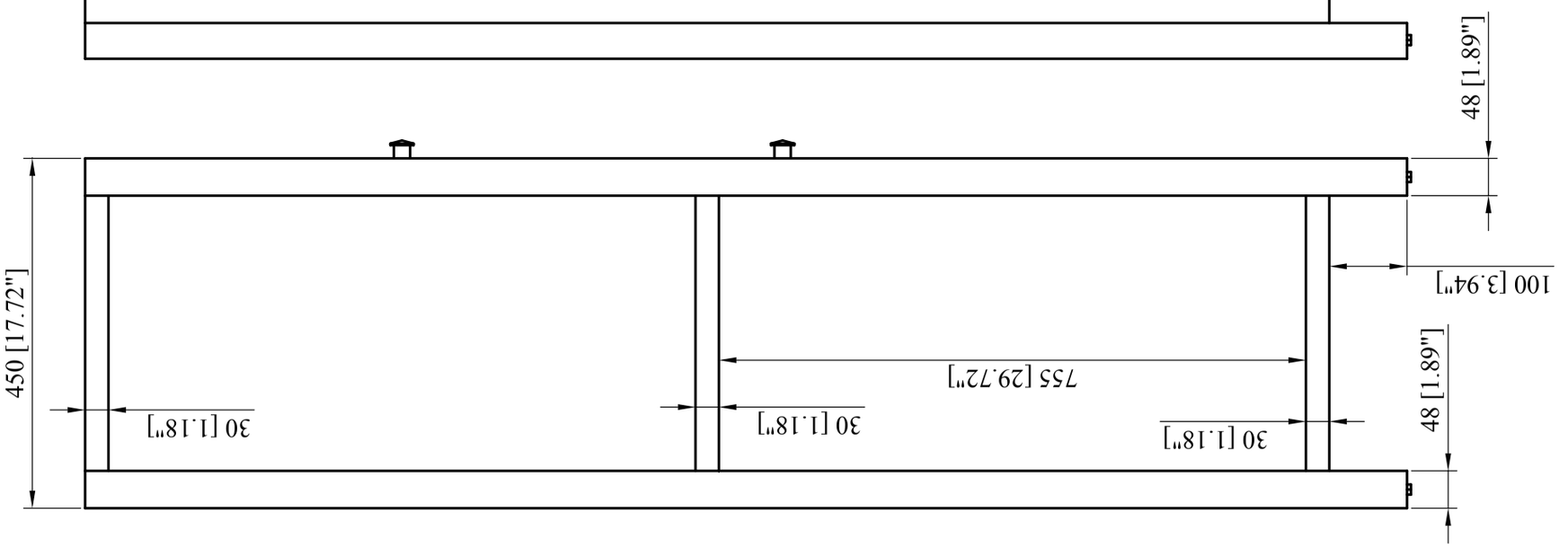
48 [1.89"]
100 [3.94"]
48 [1.89"]
450 [17.72"]
30 [1.18"]
30 [1.18"]
755 [29.72"]
30 [1.18"]

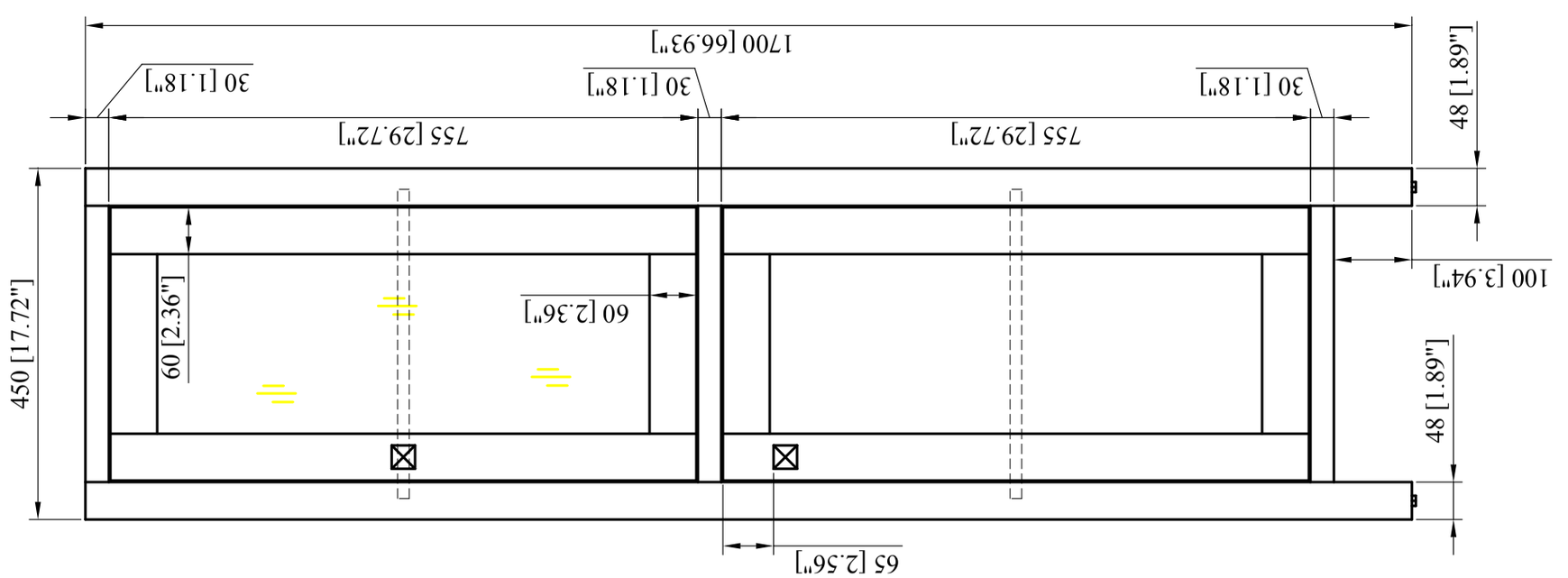
48 [1.89"]
1700 [66.93"]
30 [1.18"]
30 [1.18"]
30 [1.18"]
755 [29.72"]
755 [29.72"]
100 [3.94"]
60 [2.36"]
60 [2.36"]
48 [1.89"]
450 [17.72"]
65 [2.56"]