# KEYA-501-514
# Assembly Instruction/ Instructions D' assemblage

Parts List / Liste des Pieces

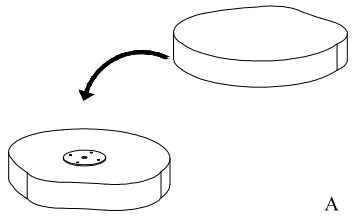


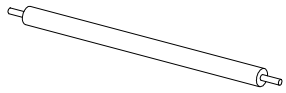


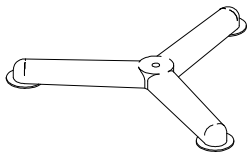


Step.1 / Etape .1

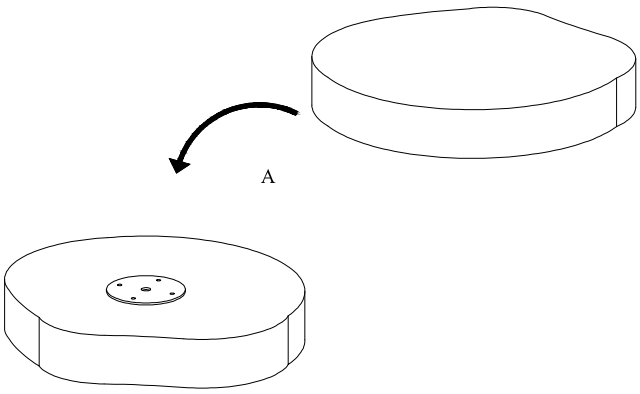


Step.2 / Etape .2

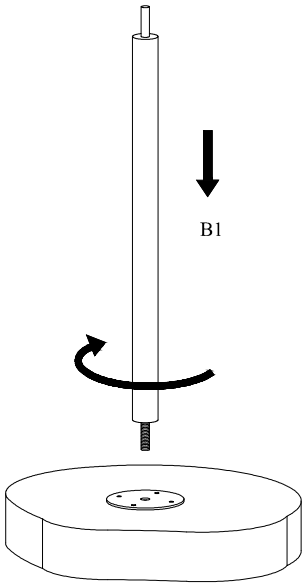


Step.3 / Etape .3

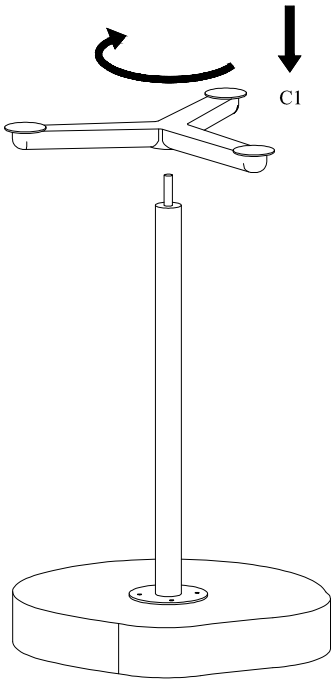

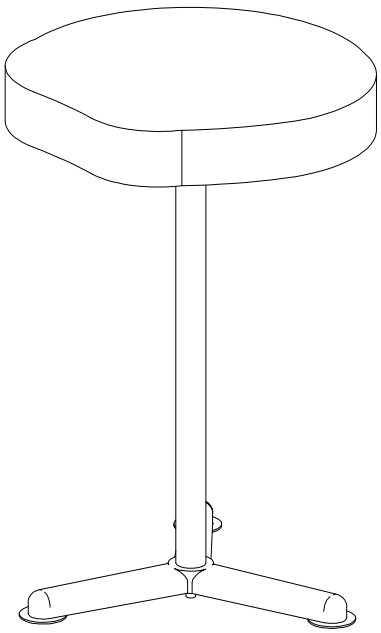
Step.4 / Etape .4