LES BAIGNOIRES SUR PIED

Streamline

GUIDE D'INSTALLATION ET D'UTILISATION

LIRE CE GUIDE EN ENTIER
AVANT D'INSTALLER LA BAIGNOIRE

CETTE BAIGNOIRE NE DEVRAIT ÊTRE INSTALLÉE
QUE PAR UN PLOMBIER PROFESSIONEL

ATTENTION ! IL FAUT DEUX PERSONNES POUR PORTER CETTE BAIGNOIRE

UPC C ®

DES QUESTIONS ? CONTACTEZ-NOUS :

streamlinebath.com support@streamlinebath.com 1 (323)-612-8011

WARRANTY

RETURNS
We thank you for your purchase. Here at Streamline®, our goal is to provide customers with exceptional bathroom and kitchen products. We understand that things sometimes don't work out. If you are unsatisfied with your Streamline® product and would like to initiate a return, please reach out to support@streamlinebath.com . We continue to grow and want to offer the best customer experience possible, and by reaching out to us prior to initiating a return, we can ensure that these issues do not continue in the future.

LIMTED WARRANTY EXCLUSION
ALL OTHER WARRANTIES EXPRESS OR IMPLIED INCLUDING ALL IMPLIED WARRANTIES OF MERCHANTABILITY OF FITNESS FOR A PARTICULAR PURPOSE ARE HEREBY DISCLAIMED. STREAMLINE IS NOT LIABLE FOR ANY INDIRECT, INCIDENTAL, CONSEQUENTIAL OR SIMILAR DAMAGES INCLUDING, BUT NOT LIMITED TO, LOST PROFITS OR REVENUE, INABILITY TO USE THE PRODUCT, OR ANY OTHER ASSOCIATED EQUIPMENT, THE COST OF SUBSTITUTE EQUIPMENT, AND ANY CLAIMS BY THIRD PARTIES RESULTING FROM THE USE OF THIS PRODUCT.

This warranty gives you specific legal rights, and you may have other rights that vary from state to state. Some states do not allow the exclusion or limitation of incidental or consequential damages, so the limitations or exclusions stated above may not apply.

WHAT IS NOT COVERED UNDER THIS LIMITED WARRANTY
- Normal wear and tear or cosmetic damage.
- Damage due to accidents, misuse, physical force, improper installation or operation, mishandling, neglect, fire, heat, water, humidity, liquids, insect infestation, or other intrusion.
- Products that have been repaired, altered or modified by anyone other than Streamline® or its authorized service representative.
- Damage caused by use of non-Streamline® accessories or misapplication.
- Products whose serial numbers have been removed, altered or rendered illegible.
- Products purchased, shipped from, used or serviced outside the United States.
- Damage caused by acts of nature such as, but not limited to, lightning damage.
- Products returned without valid proof of purchase.

DELIVERIES
Immediate inspection is required when receiving Streamline® items. It is important to notate any damage or carton count discrepancy on the BOL / Proof of Delivery (POD) receipt when you sign for the delivery, even if the package appears only slightly damaged. If the driver doesn't allow or won't wait, notate on the BOL / POD "Driver will not allow inspection." Damages should be reported to Streamline® within 3 calendar days of delivery.

Customers who sign for delivery and do not provide proper detailed description assume responsibility if merchandise is damaged or missing cartons. If the product itself appears significantly damaged, you may refuse delivery after you notate it on the POD / BOL and provide clear pictures to Streamline®. Please notify Streamline® of refusal so we can anticipate the return and send out a new item.

Please look for the following when checking:
- Carton/Pallet Count
- Crumpled and pushed in areas
- Fork lift punctures
- Holes
- Any additional outside damage to packaging

ESTIMATED SHIPPING & TRANSIT TIME
We do our best to provide you with accurate shipping times for our products. The times are estimates only. Estimated transit time will not include the time it takes for the item to be processed. Products that are in stock normally ship from the warehouse within 1-2 business days, however these products are subject to prior sale and availability and lead times are not guaranteed.

Estimated shipping time is between 2-10 business days (the actual number will depend on the state and customer availability for delivery). These shipping times are not guaranteed. If you have a time sensitive project we recommend that you contact a customer service representative at support@streamlinebath.com.

DAMAGE & DEFECTIVE GOODS POLICY
At Streamline®, we understand that a product may get damaged in transit or, on occasion, there may be a manufacturer product defect. Rest assured, we will stand behind you during this process and make sure we do everything we can to bring it to a satisfying and timely conclusion.

For us to offer this level of service, however, we need a little help from the customer in the form of a detailed product inspection immediately upon delivery. In this case, it is important to notate any damage on the BOL or POD when you sign for the delivery. Also, please provide clear photos of the damages to Streamline®. If the driver doesn't allow or won't wait notate on the BOL / POD "Driver will not allow inspection." All damages should be reported to Streamline® within 3 calendar days of delivery.

REPLACEMENT PARTS
Replacement parts are sent at Streamline's® sole discretion. For us to determine if replacement parts are necessary, please provide us with a clear description of what the issue is as well as supplementary photos for us to better serve you and understand the problem. Whether any additional fees or charges are to be assessed with respect to replacement parts will be determined on a case by case basis.

INCORRECTLY SHIPPED ITEMS
If the item received was incorrectly shipped or missing any component parts, please contact us immediately at support@streamlinebath.com

DAMAGES & REFUSING A FREIGHT SHIPMENT
If the shipment is damaged, a customer has the option of refusing the shipment. Contact our customer service representative immediately at support@streamlinebath.com when and if you refuse a shipment. Also, proper notation must be on the BOL / POD receipt.

Any external evidence of loss or damage that occurred during transit is considered visible loss or damage and must be noted on the BOL / POD and signed by the carrier's agent (driver). Failure to adequately describe the visible loss or damage could result in the carrier delaying or refusing to honor the freight claim.

Any damage that occurred during transit that was not visible at the time of delivery is considered concealed loss or damage. Due to rough handling in transit it is possible to damage the contents of a carton without damaging the outer packaging itself. If such a situation occurs, it is important to contact Streamline® immediately for instructions on how to handle this.

You must open all received boxes and inspect products for concealed damage within 72 hours (3 calendar days) of delivery and Streamline® must be notified at that time. After this time frame claims may not be honored.

Streamline® reserves the right to replace any damaged merchandise within 3 calendar days of notification by the customer. If a replacement item is available for shipping within that time period, then a refund cannot be issued. If no replacement is available, the damaged item(s) will be refunded in full if the damage was the fault of freight carrier, and all return procedures were followed.
Failure to follow return procedure for the damaged item may result in a charge for the free replacement item.

LIMITED MANUFACTURER'S WARRANTY [BATHTUB]
All parts and finishes of Streamline® bathtubs are warranted to the original consumer purchaser to be free from defects in material and workmanship for a period of two to five years [depending on model; please check the product listing or email us at support@streamlinebath.com] after the date of original retail purchase. Proof of the original purchase is required to obtain a remedy under this limited warranty. Streamline® recommends using a professional plumber for all installation and repair.

Streamline® will replace, free of charge, during the warranty period any part or finish that proves defective in material and/or workmanship under normal installation, use and service. Replacement parts may be obtained by emailing us at support@streamlinebath.com

This warranty is extensive in that it covers replacement of all defective parts and even finish, but these are the only two things that are covered. Labor charges and/or damage incurred in installation, repair, or replacement as well as any other kind of loss or damages are excluded. Proof of purchase (original sales receipt) from the original consumer purchaser must be made available to Streamline® for all warranty claims. This is the exclusive warranty by Streamline®, which does not make any other warranty of any kind, including the implied warranty of merchantability.

This warranty excludes all industrial, commercial and business usage, whose purchasers are hereby extended a one-year limited warranty from the date of purchase, with all other terms of this warranty applying except the duration of the warranty.

Any damage to this faucet as a result of misuse, abuse, or neglect, or any use of other than genuine Streamline® replacement parts will void the warranty.

LIMITED MANUFACTURER'S WARRANTY [FAUCETS]
All parts and finishes of Streamline® faucets are warranted to the original consumer purchaser to be free from defects in material and workmanship for three years from date of purchase. Streamline® recommends using a professional plumber for all installation and repair.

Streamline® will replace, free of charge, during the warranty period any part or finish that proves defective in material and/or workmanship under normal installation, use and service. Replacement parts may be obtained by emailing us at support@streamlinebath.com

This warranty is extensive in that it covers replacement of all defective parts and even finish, but these are the only two things that are covered. Labor charges and/or damage incurred in installation, repair, or replacement as well as any other kind of loss or damages are excluded. Proof of purchase (original sales receipt) from the original consumer purchaser must be made available to Streamline® for all warranty claims. This is the exclusive warranty by Streamline®, which does not make any other warranty of any kind, including the implied warranty of merchantability.

This warranty excludes all industrial, commercial and business usage, whose purchasers are hereby extended a one year limited warranty from the date of purchase, with all other terms of this warranty applying except the duration of the warranty.

Any damage to this faucet as a result of misuse, abuse, or neglect, or any use of other than genuine Streamline® replacement parts will void the warranty.

AVANT L'INSTALLATION

Ces produits ne doivent être installés que par un plombier en règle et assuré.

L'installation de ces produits par un non-professionnel rendra immédiatement la garantie nulle.

Nous ne sommes pas responsables des législations locales auxquelles ce produit devrait se plier. Les réglementations de plomberie et construction peuvent varier d'État à État. Streamline n'est pas responsable des dégâts accidentels ou dégâts des eaux causés à ce produit.

Streamline n'est pas responsable des frais supplémentaires d'installation, réinstallation, extraction, réparation ou transport en cas d'un défaut de produit.

OUTILS NÉCESSAIRES

Silicone

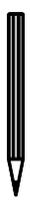

Crayon à papier

Clé à molette

Niveau à bulle

Ruban mesureur

Lunettes de sécurité

DANS LA BOITE

Attention : Les différents modèles ont différents drains et pieds. Veuillez voir la page suivante pour déterminer quel drain ou pieds correspond au modèle que vous avez acheté.

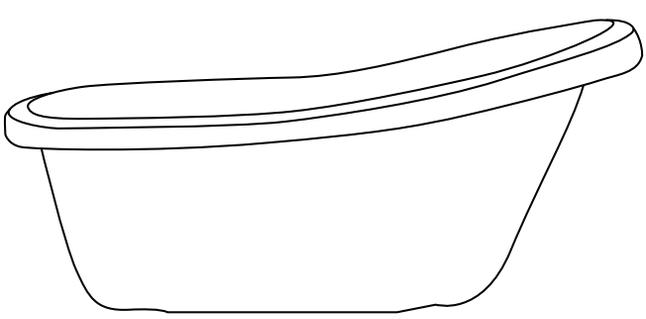

Baignoire

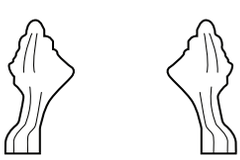

Pieds

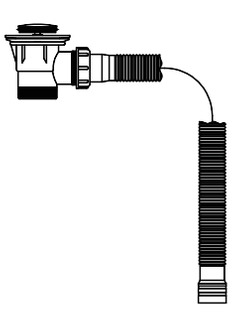

(Préinstallé)
Modèle : A1840-0

Drain

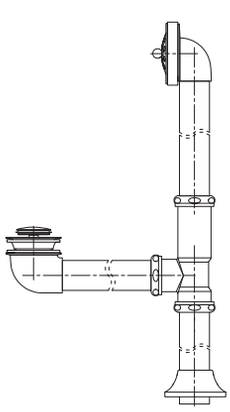

Model: N-DWF-GLD
Modèle : N-DWF-CH

Drain

COMPATIBILITÉ DES MODÈLES DE DRAINS

BAIGNOIRES AUTONOME

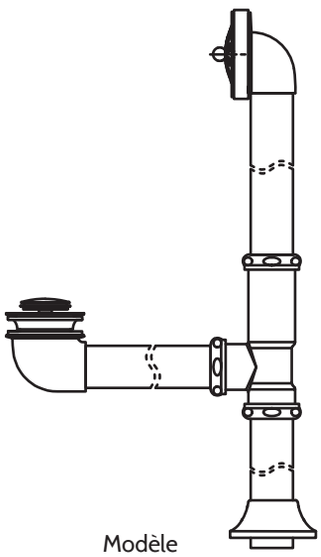

Modèle
N-DWF-CH
N-DWF-GLD

N-100-60CFWH-DM
N-101-68CFWH-DM
N-102-60CFRD-DM
N-103-68CFBL-DM

N-340-67CFWH-FM
N-341-59CFWH-FM
N-342-63CFWH-FM

N-860-60CFGR-FM
N-861-68CFWH-FM

N-900-60CFWH-DM
N-901-68CFWH-DM

N-920-60CFWH-FM
N-921-68CFGR-FM

N-1120-59CFBL-DM
N-1121-67CFWH-DM

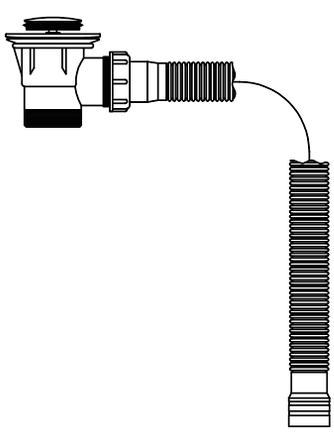

Modèle
A1840-0

N-480-61FSHW-FM

N-1020-62CFWH-FM
N-1021-62CFRD-FM

N-1080-59CFWH-FM
N-1081-67CFWH-FM

N-1100-59CFWH-FM
N-1101-67CFGR-FM

N-481-61FSBL-FM
N-482-61FSRD-FM

DANS LA BOITE DES PIEDS

Modèles compatibles

N-CFL1775-CH
N-CFL1775-WH
N-CFL1775-BL
N-CFL1775-GLD
N-CFL1912-CH
N-CFL1912-WH
N-CFL1912-BL
N-CFL1912-GLD
N-CFL11603-CH
N-CFL11603-GLD
N-CFL11603-BL
N-CFL11603-WH
N-CFLK36572-BL
N-CFLK36572-CH
N-CFLK36572-GLD
N-CFLK35672-WH
N-CFL46572-BL
N-CFL46572-WH
N-CFL46572-GLD
N-CFL46572-CH

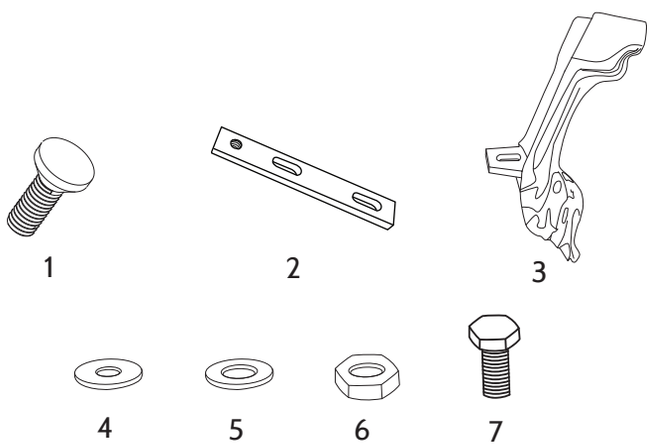

No.	Description	Qté.
1	Pieds ajustables	4
2	Barre en métal	4
3	Pied	4
4	Bague petit diamètre	8
5	Bague grand diamètre	4
6	Écrou	8
7	Boulon hexagonal	4

Applicable models:

N-CFL11601-CH
N-CFL11601-WH
N-CFL11601-BL
N-CFL11601-GLD

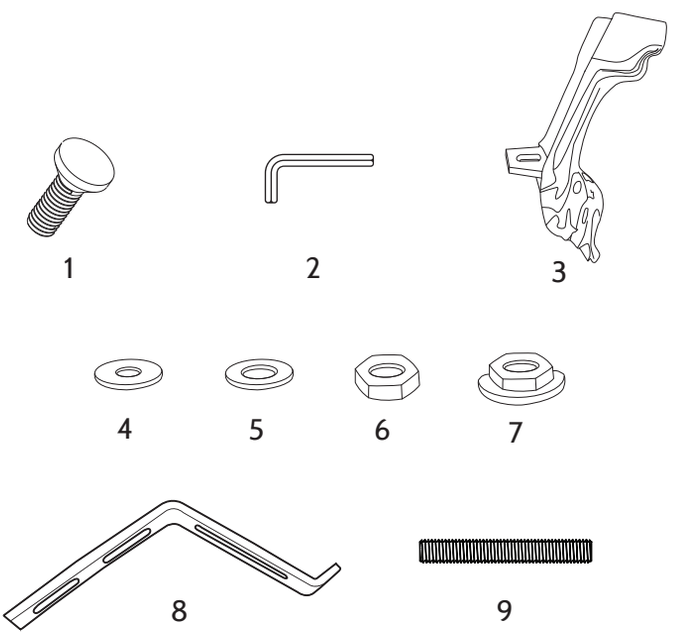

No.	Description	Qté.
1	Pieds ajustables	4
2	Clé hexagonale	1
3	Pied	4
4	Bague petit diamètre	14
5	Bague grand diamètre	9
6	Écrou	12
7	Écrou avec bague	16
8	Barre en métal	4
9	Boulons	8

DIAGRAMMES DU DRAIN

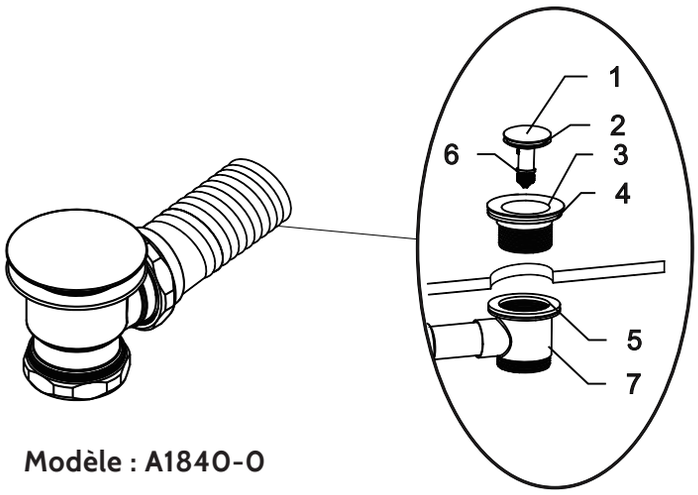

Modèle : A1840-0

No.	Description	Qté.
1	Couvercle pop-up	1
2	Anneau en O	1
3	Passoire	1
4	Joint en caoutchouc	1
5	Joint plat en caoutchouc	1
6	Cartouche	1
7	Tee	1

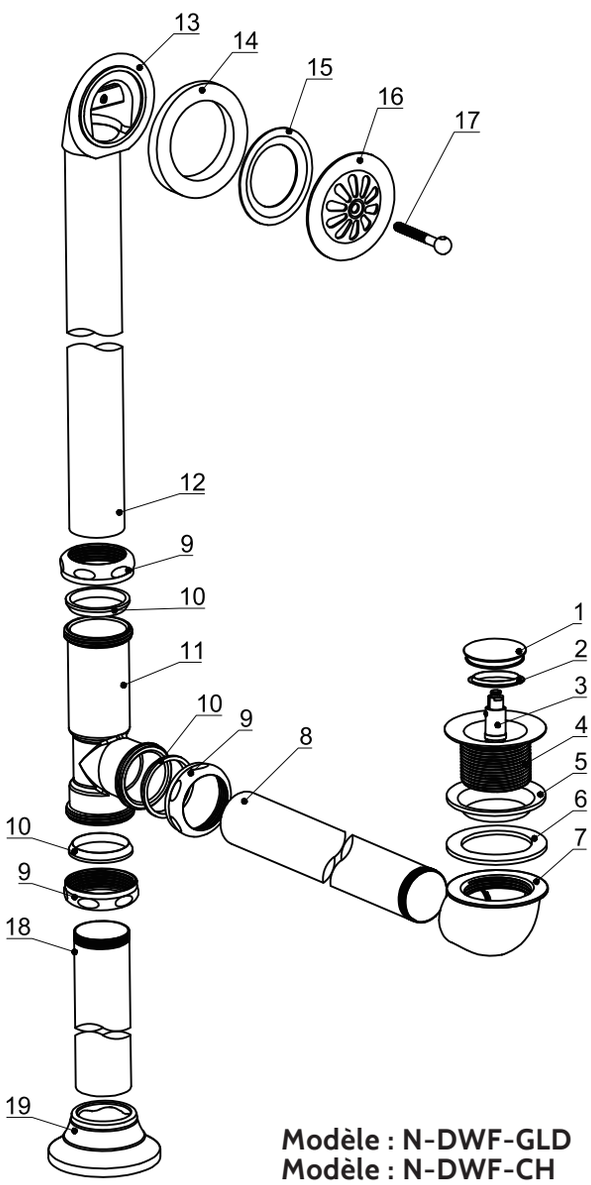

Modèle : N-DWF-GLD
Modèle : N-DWF-CH

No	Description	Qté.
1	Couvercle	1
2	Couvercle de joint	1
3	Cartouche	1
4	Passoire	1
5	Joint supérieur de déchets	1
6	Joint inférieur de déchets	1
7	Connecteur	1
8	Noix d'assemblage	1
9	Noix	1
10	Bague	3
11	Tee	3
12	Tuyau	1
13	Corps de débordement	1
14	Joint effilé en caoutchouc	1
15	Joint supérieur de débordement	1
16	Plateau de débordement	1
17	Boulon	1
16	Pièce taique	1
17	Bride	1

CONFIGURATION DES PIEDS

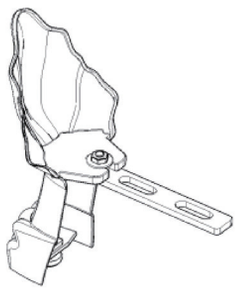

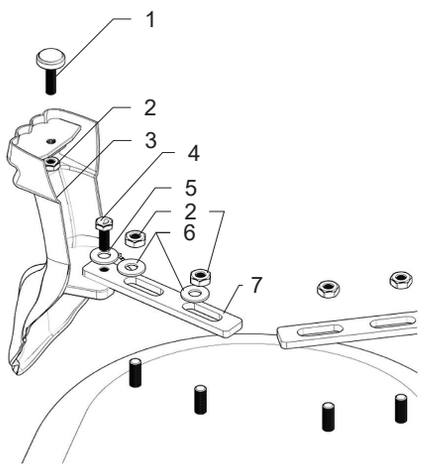

No.	Description	Qté.
1	Pieds ajustables	1
2	Écrou	2
3	Pied	1
4	Boulon hexagonal	1
5	Bague petit diamètre	1
6	Bague grand diamètre	2
7	Barre en métal	1

Modèles compatibles :

N-CFL1775-CH
N-CFL1775-WH
N-CFL1775-BL
N-CFL1775-GLD
N-CFL1912-CH
N-CFL1912-WH
N-CFL1912-BL
N-CFL1912-GLD
N-CFL11603-CH
N-CFL11603-GLD
N-CFL11603-BL
N-CFL11603-WH
N-CFLK36572-BL
N-CFLK36572-CH
N-CFLK36572-GLD
N-CFLK35672-WH
N-CFL46572-BL
N-CFL46572-WH
N-CFL46572-GLD
N-CFL46572-CH

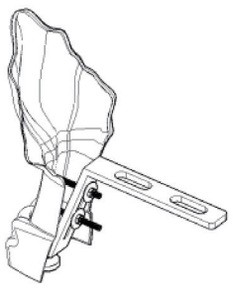

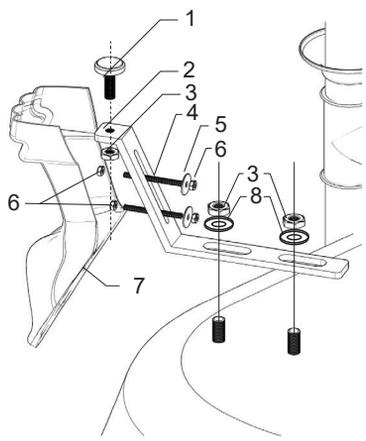

No.	Description	Qté.
1	Pieds ajustables	1
2	Barre en métal	1
3	Écrou	3
4	Boulon	2
5	Bague petit diamètre	2
6	Écrou avec bague	4
7	Pied	1
8	Bague grand diamètre	2

Modèles compatibles :

N-CFL11601-CH
N-CFL11601-WH
N-CFL11601-BL
N-CFL11601-GLD

INSTALLATION DE LA BAIGNOIRE

1. Assurez-vous que le sol est droit et assez solide.

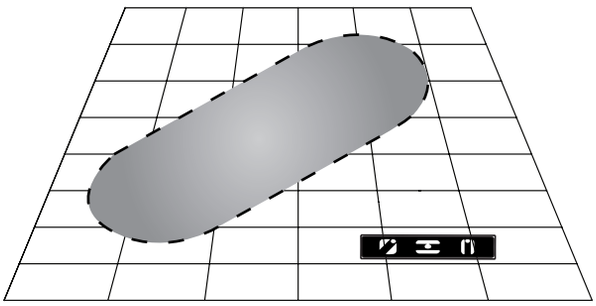

2. Imperméabiliser le sol est recommandé.

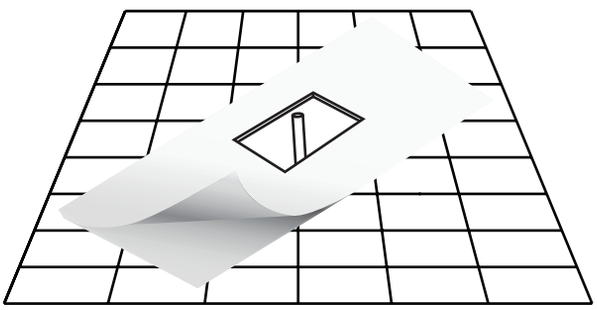

3. Déterminer l'emplacement du drain au sol en mesurant la distance entre le drain et le trou d'évacuation sous la baignoire. Nettoyer la zone de drain avant l'installation. La zone devrait être sèche et vide.

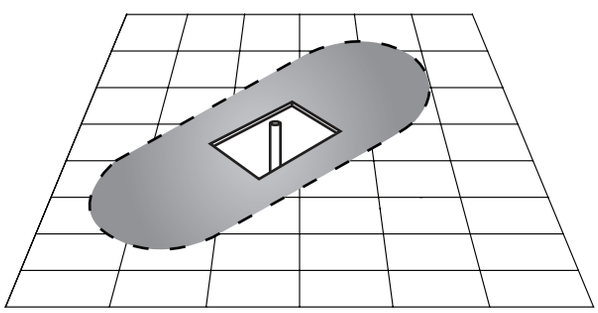

4. Sortir la baignoire de sa boite. Il est recommandé que deux personnes au moins portent la baignoire. Assurez-vous de la porter à l'envers.

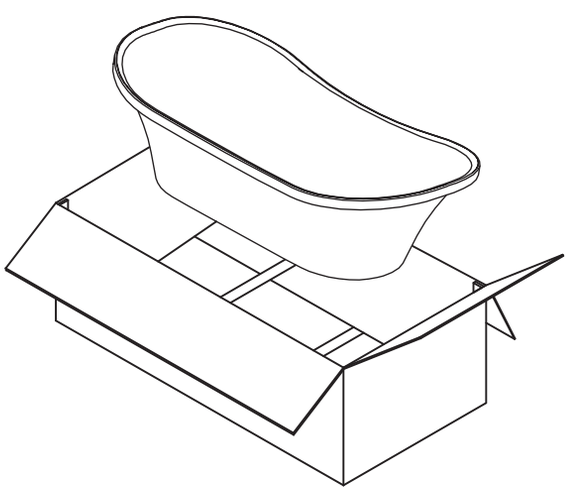

5. Placer la baignoire à l'envers sur un tapis ou du carton afin d'éviter tout contact avec une surface dure.

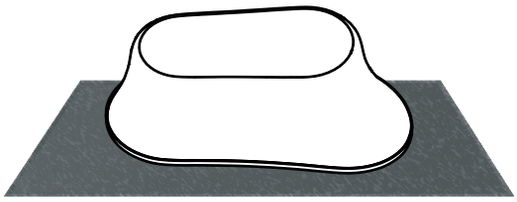

6. Cette étape consiste à assembler les pieds à la baignoire. Veuillez utiliser les pages précédentes pour déterminer quel modèle est compatible avec votre baignoire.

Modèles compatibles :

N-CFL1775-CH	N-CFL11603-BL
N-CFL1775-WH	N-CFL11603-WH
N-CFL1775-BL	N-CFLK36572-BL
N-CFL1775-GLD	N-CFLK36572-CH
N-CFL1912-CH	N-CFLK36572-GLD
N-CFL1912-WH	N-CFLK35672-WH
N-CFL1912-BL	N-CFL46572-BL
N-CFL1912-GLD	N-CFL46572-WH
N-CFL11603-CH	N-CFL46572-GLD
N-CFL11603-GLD	N-CFL46572-CH

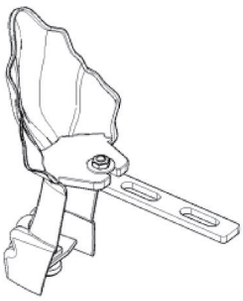

a) Prenez 1 pied ajustable #1, placez le dans le trou du pied #3 et vissez 1 boulon #2 au pied du pied ajustable.

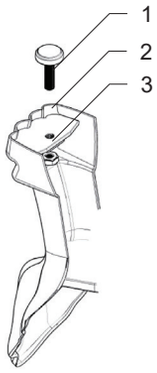

b) Prenez 1 boulon #4 et 1 bague #5 et placez les dans la barre en métal #8.

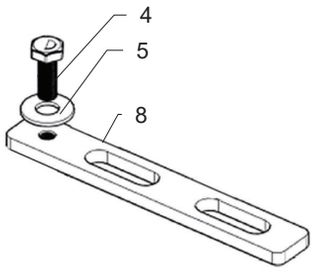

c) Prenez la plaque en métal et placez la sous le pied #3.

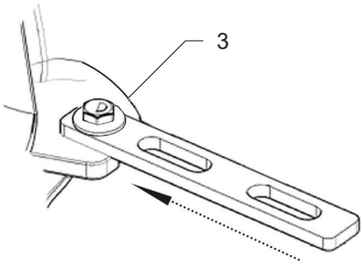

Modèles compatibles :

N-CFL11601-CH
N-CFL11601-WH
N-CFL11601-BL
N-CFL11601-GLD

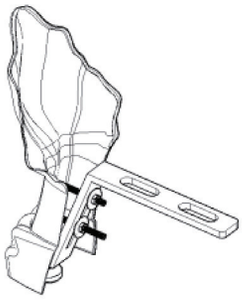

a) Prenez 1 pied ajustable #1, placez le dans la barre en métal #2 en utilisant 1 boulon #3 pour fixer le pied ajustable au bas.

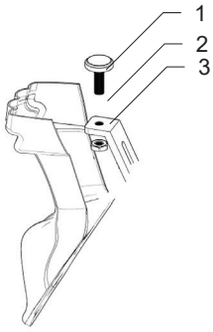

b) Prenez 1 boulon #4 et 1 noix avec bague #6 et vissez la noix sur le boulon jusqu'à ¼ du boulon. Répétez l'étape 1 avec le second boulon.

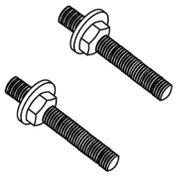

c) Prenez le boulon et la noix et vissez les au pied comme sur le diagramme ci-dessous. Assurez vous de serrer le boulon sur le pied avec la clé hexagonale.

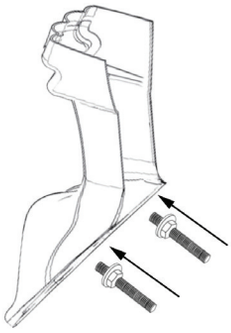

d) Placez la plaque en métal sur les boulons qui sont déjà sur la baignoire.

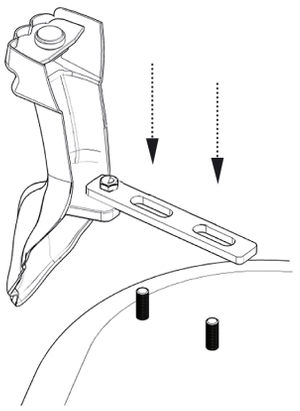

e) Assurez vous d'ajuster la barre en métal pour qu'elle soit bien en place avec les boulons sur la baignoire. Cela vous aidera à installer les pieds correctement.

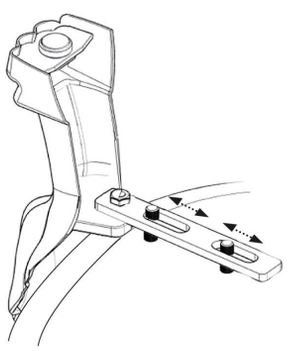

f) Prenez 2 bagues #6 et placez le sur les barres en métal sur la baignoire.

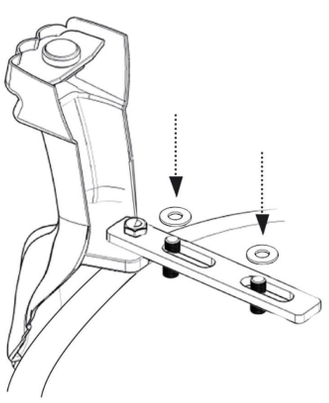

g) Mettez 1 noix #2 sur chaque boulon et vissez. Ne pas serrer.

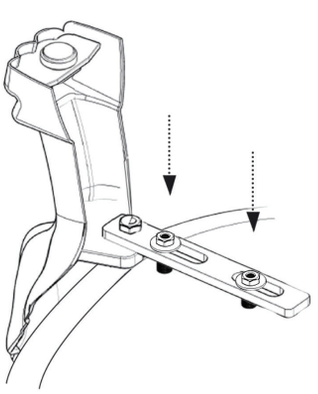

d) Retirer les capuchons de sécurité sur la baignoire.

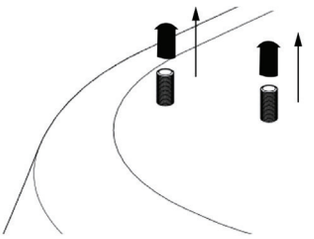

e) Placez la barre en métal #2 sur les boulons sur la baignoire comme sur le diagramme ci-dessous. Assurez vous d'ajuster la barre en métal pour qu'elle soit bien en place avec les boulons sur la baignoire. Cela vous aidera à installer les pieds correctement.

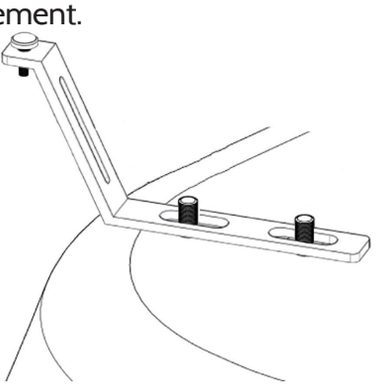

f) Prenez le pied #7 et alignez le avec la baignoire en vous assurant que les boulons passent par les trous et sont bien en place avec la baignoire et la barre métalique.

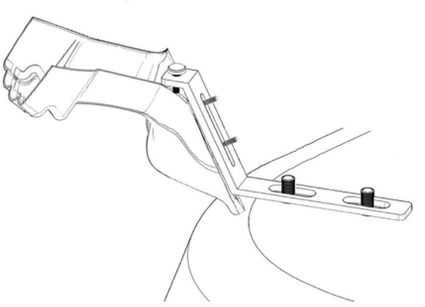

g) Prenez 1 bague #8 et mettez la sur le boulon sur la baignoire. Puis prenez 1 noix #3 et placez la sur la bague, mais ne pas serrer le boulon complètement. Recommencer pour les autres boulons sur la baignoire.

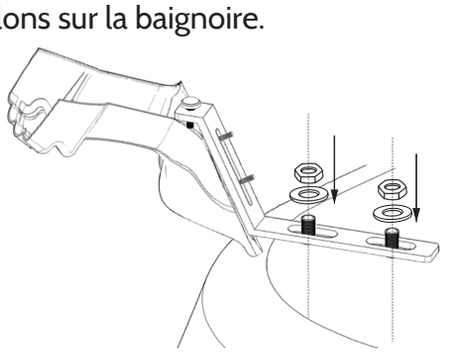

h) Assurez vous que le pied soit bien aligné avec la baignoire et bien en place contre la baignoire. Après cela, utiliser la clé à molette pour serrer les boulons.

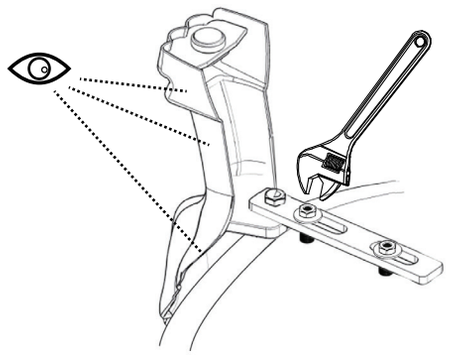

i) Répéter la procédure pour les trois autres pieds.

h) Prenez 1 bague #5 et mettez la sur le boulon sur la barre en métal. Puis prenez 1 noix #6 et placez la sur la bague, mais ne pas serrer le boulon complètement. Recommencer pour les autres boulons sur la barre. Après cela, utiliser la clé à molette pour serrer les boulons.

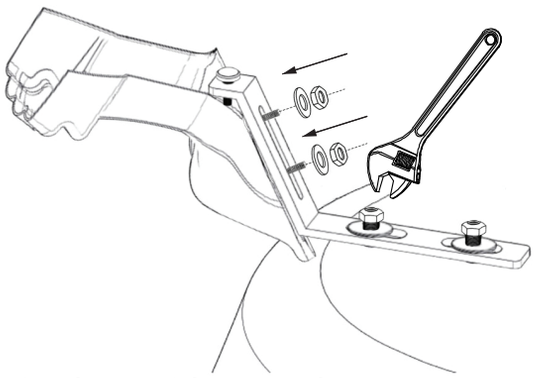

i) Répéter la procédure pour les trois autres pieds.

Les instructions d'installation de drain suivantes sont valables pour les modèles N-DWF-CH & N-DWF-GLD. Veuillez passer à l'étape 12 pour le drain A-1840-0.

7. Prenez la passoire, posez le silicone autour et puis placez la dans le trou du drain en vous assurant qu'il ne reste pas d'espace. Utilisant la colle silicone. NE PAS utiliser de colle de plomberie.

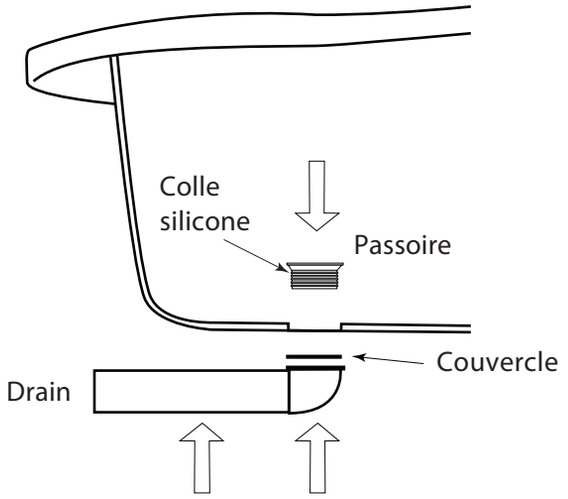

8. Insérez le tuyau dans le trou en utilisant l'anneau en O, la noix d'assemblage et la bride. Le tuyau devra peut-être être coupé. 1 ou 2" du tuyau devrait entrer dans le trou. Placez la bride sur le tuyau et placez le tout au sol.

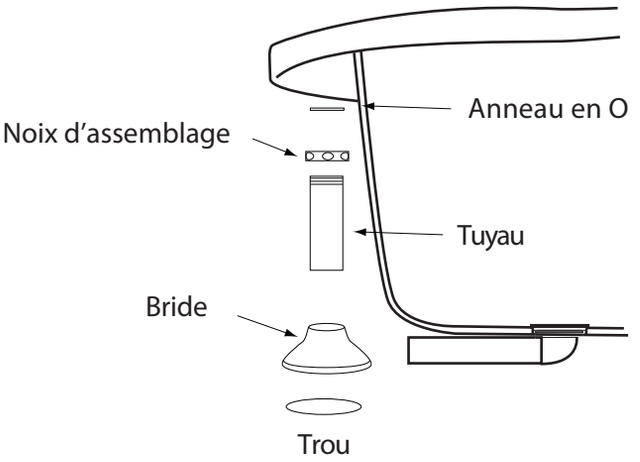

9. Assemblez la section tee avec le tuyau, bague anti débordement, et le drain en utilisant des noix d'asseblange et des anneaux en O.

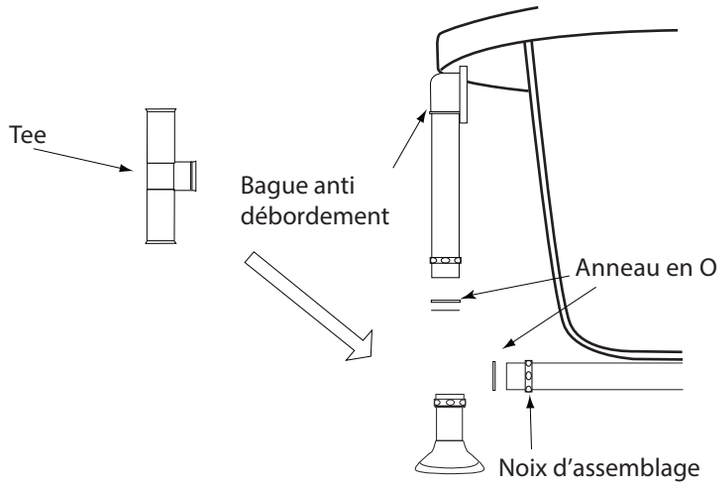

10 . Attachez le joint en caoutchouc à la bague de débordement. Alignez la bague avec le trou de débordement et attachez le drain à la baignoire avec la plaque de débordement prévue.

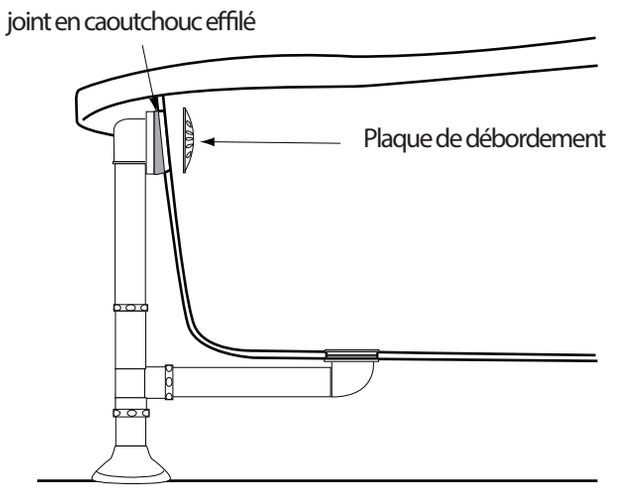

11 . Assurez vous qu'aucune eau ne s'échappe des joints.

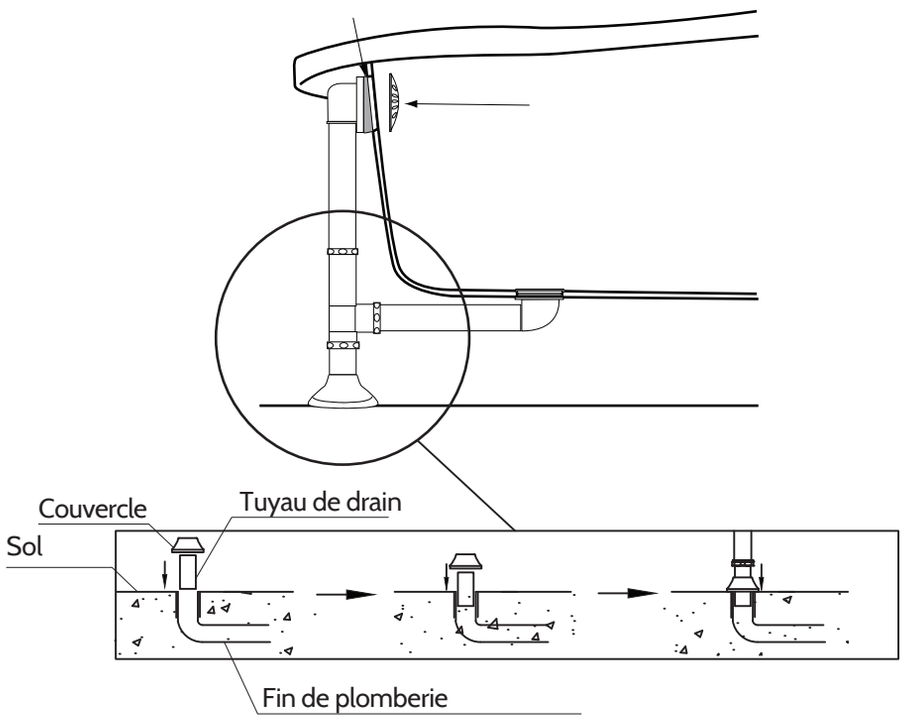

Les étapes suivantes sont pour les drains A1840-0.

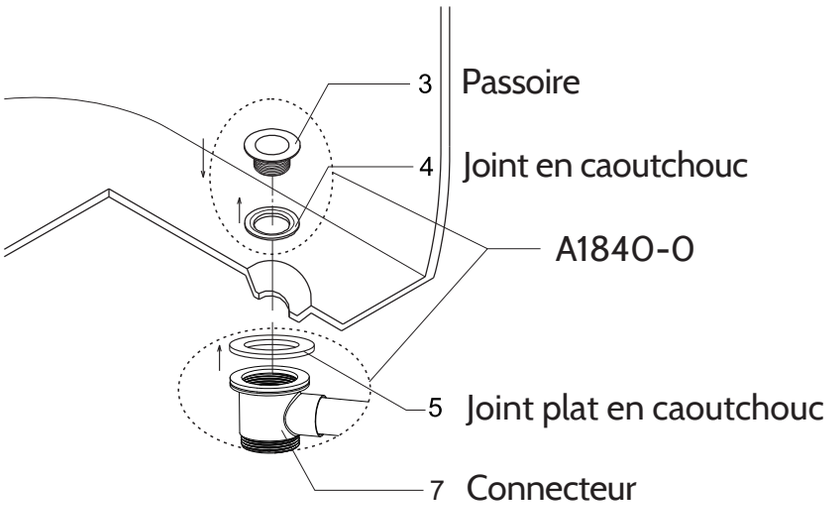

12. Placez le joint en caoutchouc #4 sur la passoire #3

13. Placez le joint et passoire dans le trou de drain pré-percé.

14. Placez le joint plat #5 sur le connecteur #7.

15. Connectez le connecteur avec le joint plat, passoire et joint et serrez les à la main. Puis utilisez une clé à molette pour serrer le connecteur.