EUROfase LIGHTING

TEL 905.695.2055 **toll free** 1.800.660.5391
FAX 905.695.2056 **toll free** 1.800.660.5390

33 West Beaver Creek Road Richmond Hill, Ontario Canada L4B 1L8

34121, SQUARE OUTDOOR LED WALL MOUNT

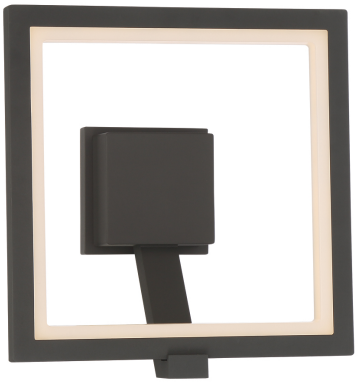

Options Available

ITEM NO.	FINISH	SHADE
34121-016	Graphite Grey	Frosted Acrylic

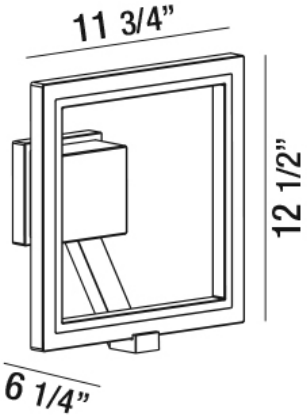

Product Details

Item No.	:	34121-016
Finish	:	Graphite Grey
Shade	:	Frosted Acrylic
Width	:	11.75"
Height	:	12.5"
Max Extension	:	6.25"
Est. Weight	:	5.72 lbs
IP Rating	:	65
Approval	:	cULus

BULB DETAILS

No. of Bulbs	:	1
Bulb Type	:	LED
Bulb Voltage	:	100~277V
Bulb Wattage	:	13W
Bulb Socket	:	LED
Input Voltage	:	DULV
Lumens	:	1400lm
Kelvin	:	3000K
CRI	:	90++
Bulb Included	:	Yes

TECHNICAL DETAILS

Canopy Length	:	4.5"
Canopy Width	:	4.5"
Canopy Height	:	0.75"
Driver	:	Royalux

PROJECT INFORMATION

Job Name: _____ Date: _____ Type: _____

Comments: _____