KB6631,2,5,8CML

Manhattan Tub/Shower Faucet
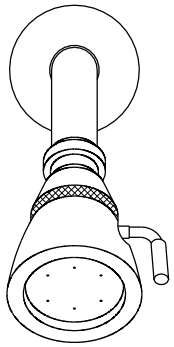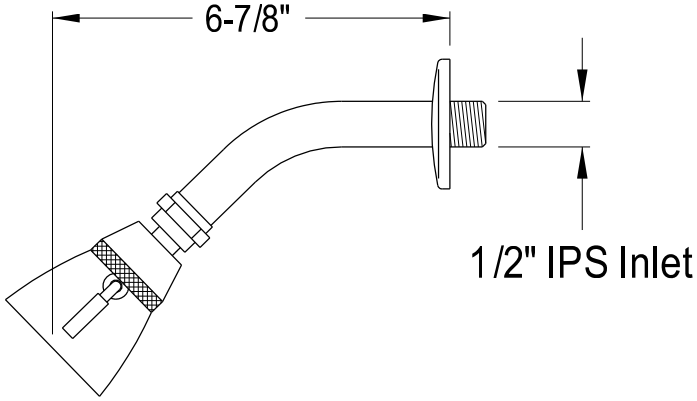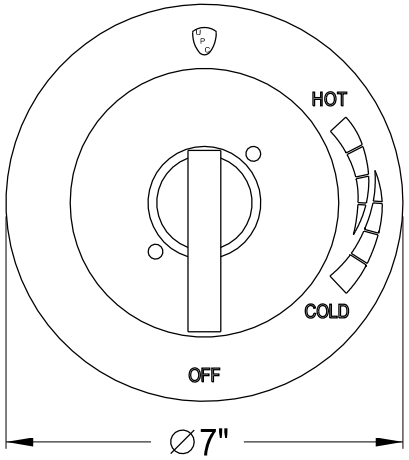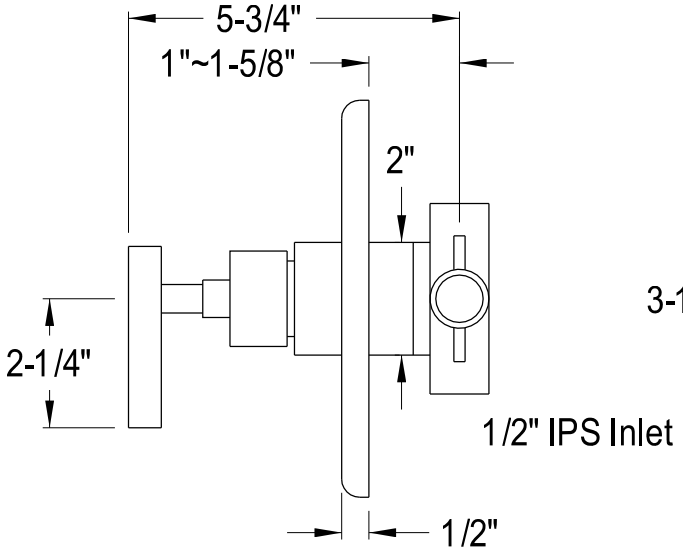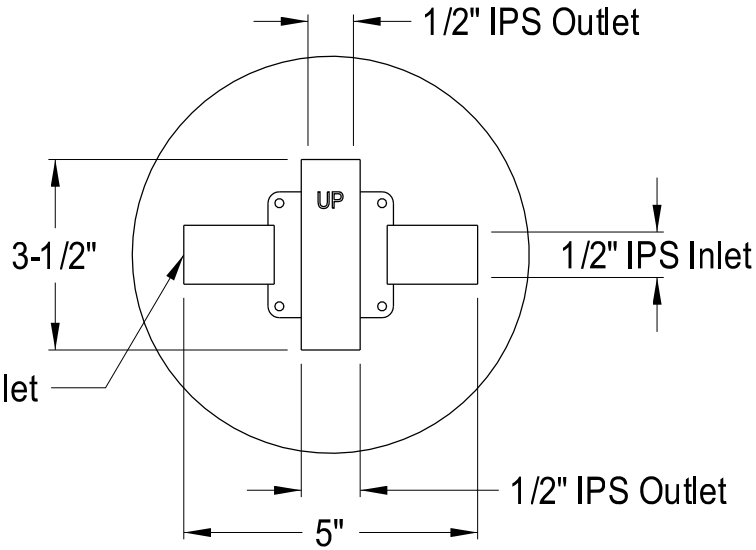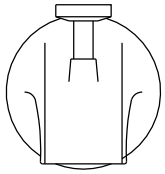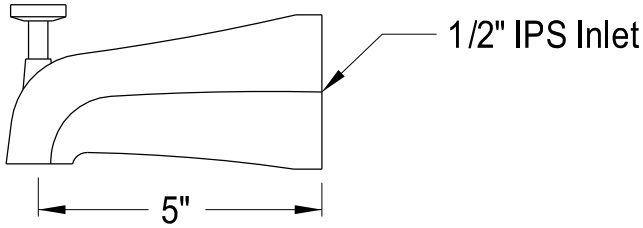
2009-01-A