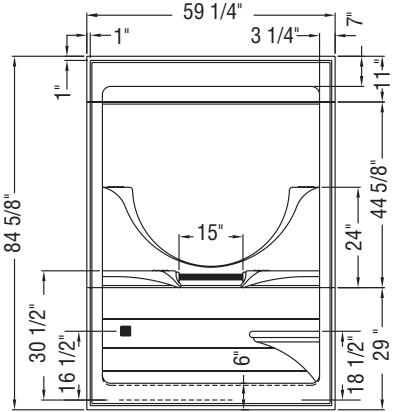
59 1/4"
1"
3 1/4"
7"
1"
11"
84 5/8"
44 5/8"
15"
24"
30 1/2"
16 1/2"
6"
18 1/2"
29 "

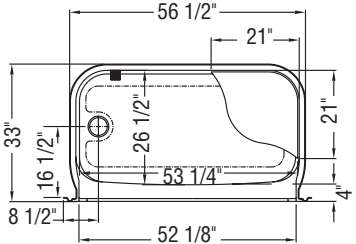
56 1/2"
21"
33"
26 1/2"
21"
16 1/2"
53 1/4"
4"
8 1/2"
52 1/8"