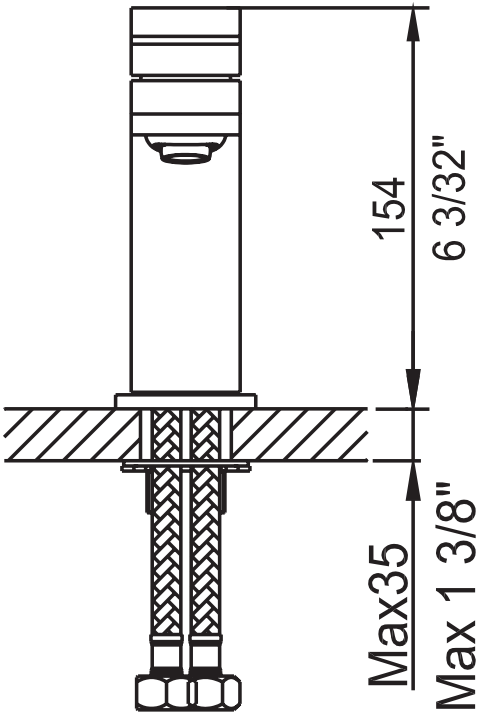
154
6 3/32"
Max35
Max 1 3/8"

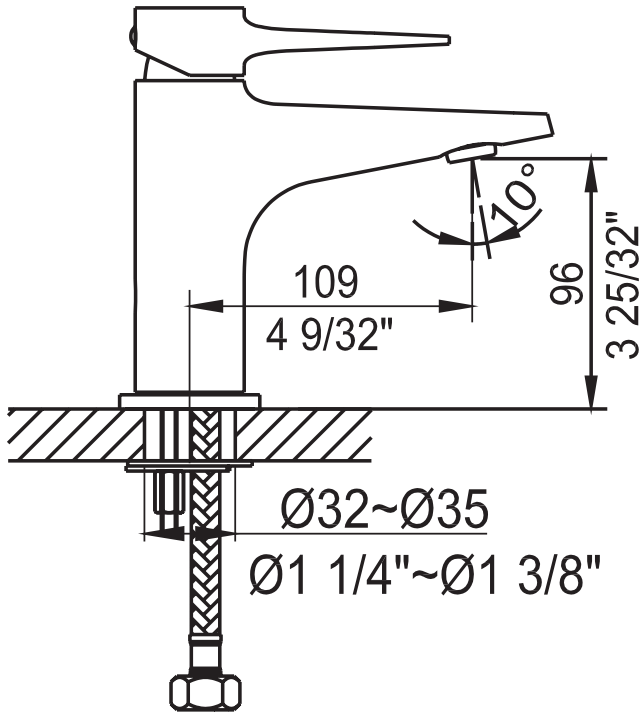
10°
109
4 9/32"
96
3 25/32"
Ø32~Ø35
Ø1 1/4"~Ø1 3/8"