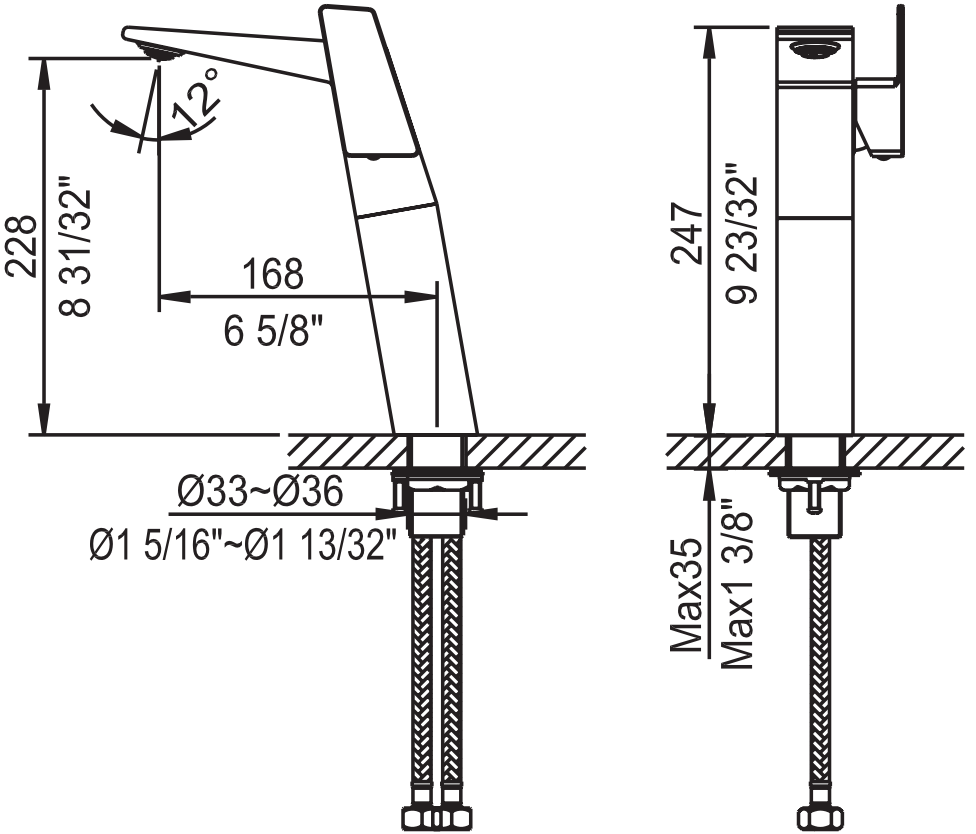
12°
228
8 31/32"
168
6 5/8"
Ø33~Ø36
Ø1 5/16"~Ø1 13/32"
247
9 23/32"
Max35
Max1 3/8"