MODEL#:**ES2141X**
PRODUCT SPECIFICATION SHEET

Elements Of Design

Note: Photo above and Drawing below shows overall style of the product, handle styles may be different to the product model number this specification sheet is refering to.

DESCRIPTION:

High Arch Spout For Wall Mount Ktchn Fct W/Metal Cross Hdl

CARTRIDGES (If applicable):

CARTRIDGE TYPE	MODEL #
Hot Cartridge	
Cold Cartridge	
Shared or Single H&C Cartridge	KC1000H
Diverter (If applicable)	
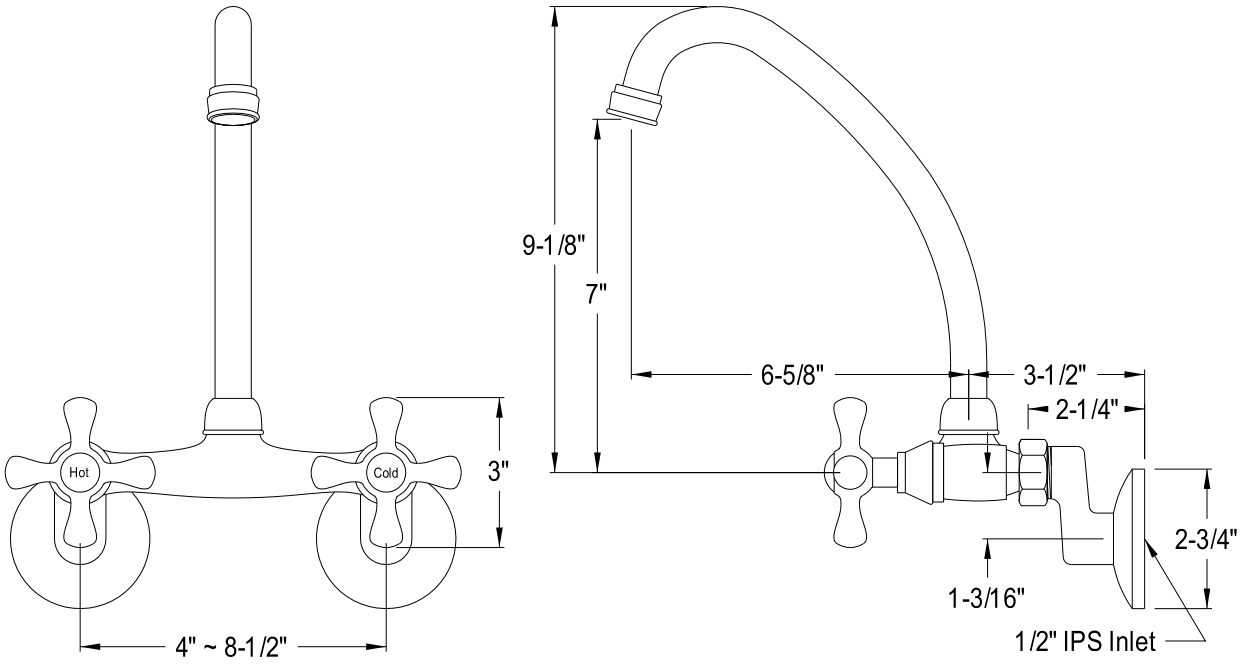
Note: Please always check with Elements of Design Customer Service for Cartridge Model Number Verification before you order.