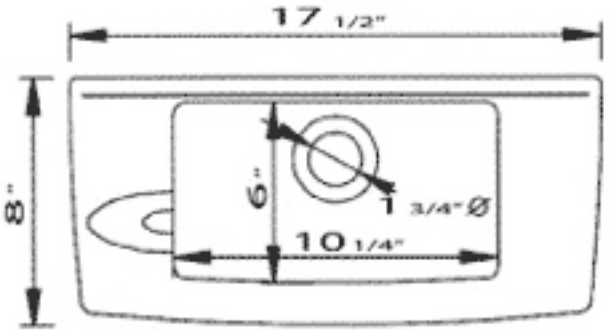
17 1/2"
8"
6"
1 3/4"Ø
10 1/4"

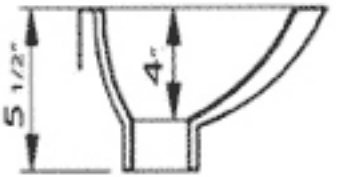
5 1/2"
4"

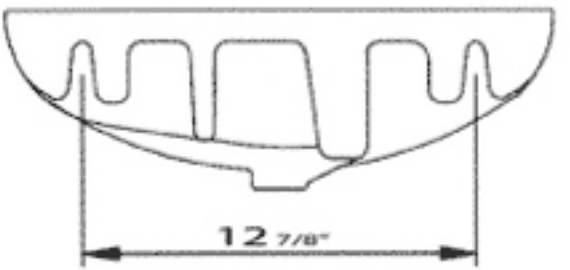
12 7/8"